NORTH ELEVATION
SCALE: ¼"=1'-0"

GRASSI DESIGN GROUP
46 Waltham Street, Suite 3A
Boston, MA 02118
Phone 617.956.9992
Fax 917.956.9993

BEAUCHEMIN GRASSI INTERIORS

JOB NO: 2305
SCALE: ¼"=1'-0"

2A-4A MILFORD STREET

2A-4A MILFORD STREET, BOSTON MA

COLOR RENDERING

ONE WAY
DO NOT
ENTER

ONE WAY

ONE WAY
DO NOT
ENTER

2A
Milford Street
4A
Milford Street
TOYOTA

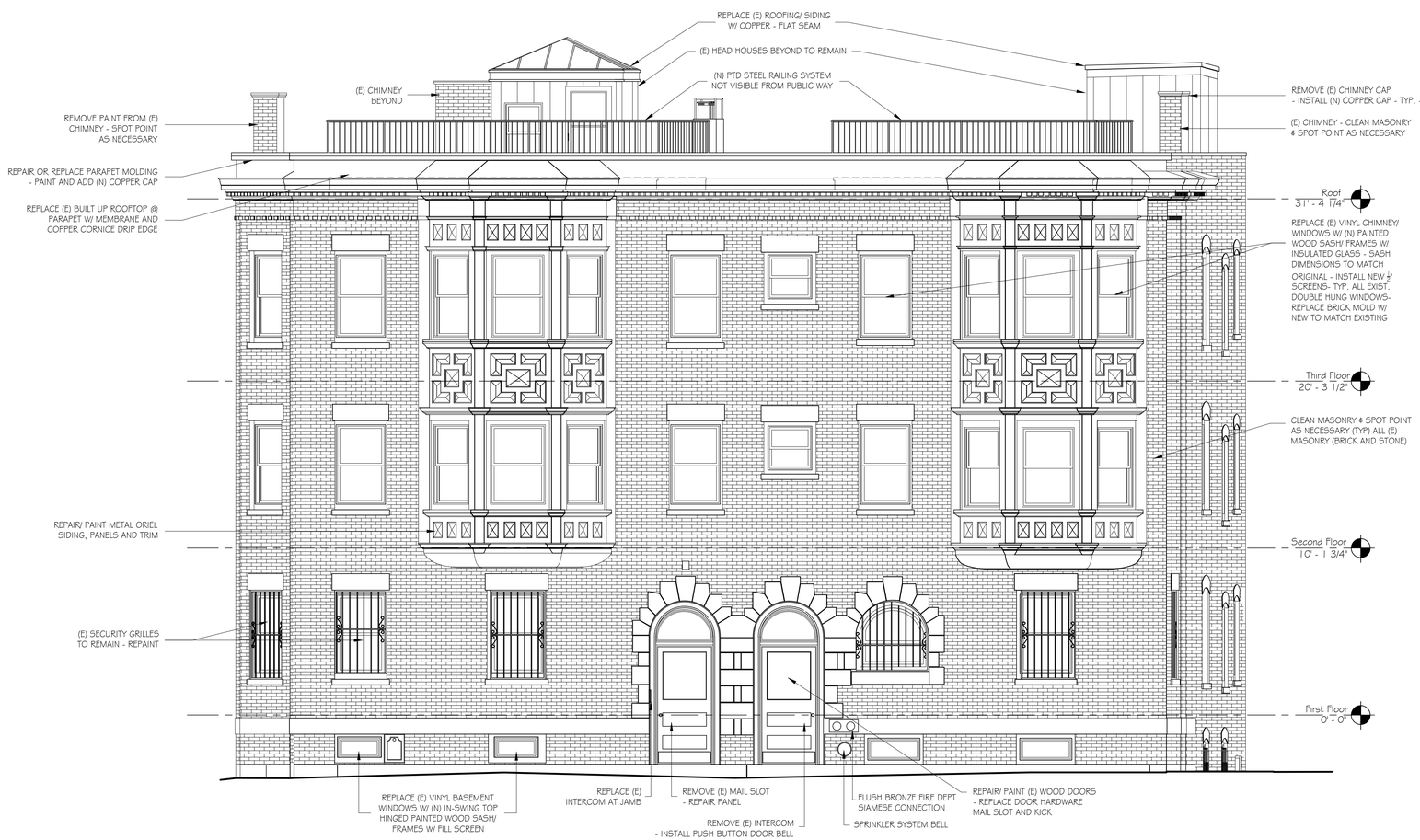

NORTH ELEVATION

SCALE: ¼"=1'-0"

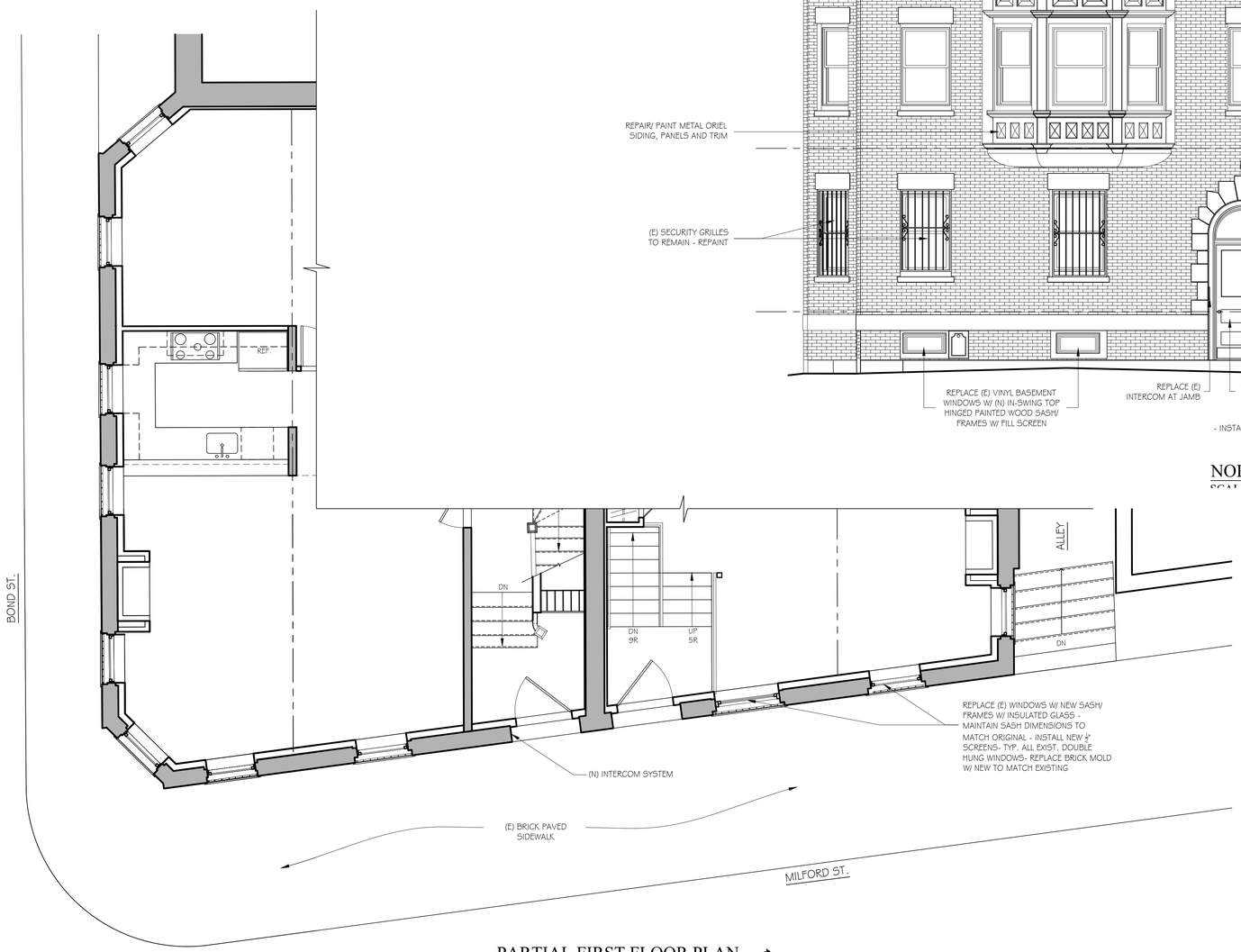

PARTIAL FIRST FLOOR PLAN

SCALE: ¼"=1'-0"

N

46 Waltham Street, Suite 3A
Boston, MA 02118
Phone 617-956-9992
Fax 917-956-9993

GD GRASSI DESIGN GROUP
BG BEAUCHEMIN GRASSI INTERIORS

JOB NO: 2306
SCALE: ½"= 1'-0"

2A-4A MILFORD STREET

2A-4A MILFORD STREET, BOSTON MA

PARTIAL FIRST FLOOR PLAN AND NORTH ELEVATION

1

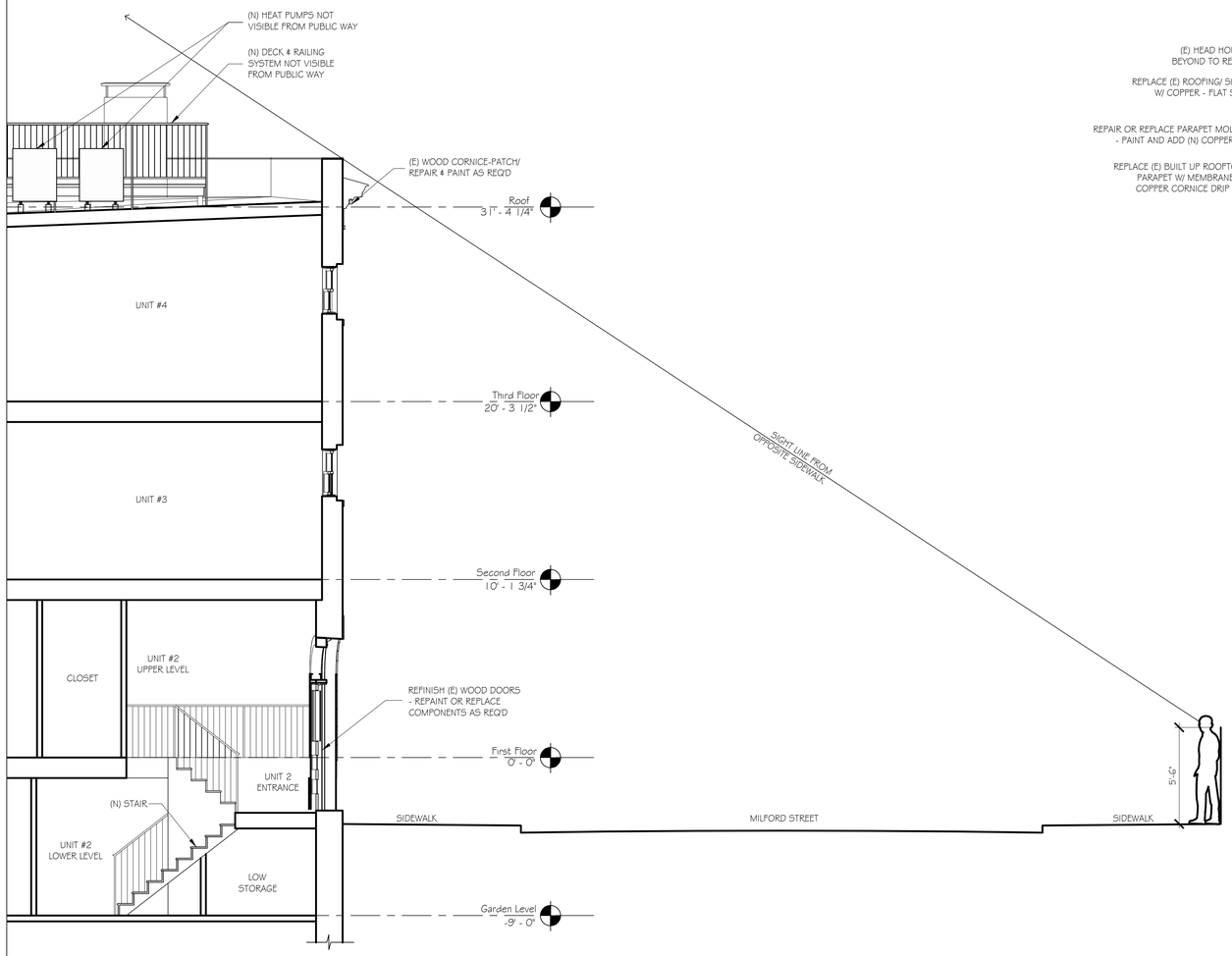

PARTIAL BUILDING SECTION
SCALE: ¼"=1'-0"

EAST ELEVATION
SCALE: ¼"=1'-0"

GRASSI DESIGN GROUP
46 Waltham Street, Suite 3A
Boston, MA 02118
Phone 617-956-9992
Fax 917-956-9993
BEAUCHEMIN GRASSI INTERIORS

JOB NO: 2308
SCALE: ¼"= 1'-0"

2A-4A MILFORD STREET
2A-4A MILFORD STREET, BOSTON MA

PARTIAL BUILDING SECTION AND EAST ELEVATION

2

JB PROPER BOSTONIAN SH WINDOW UNIT

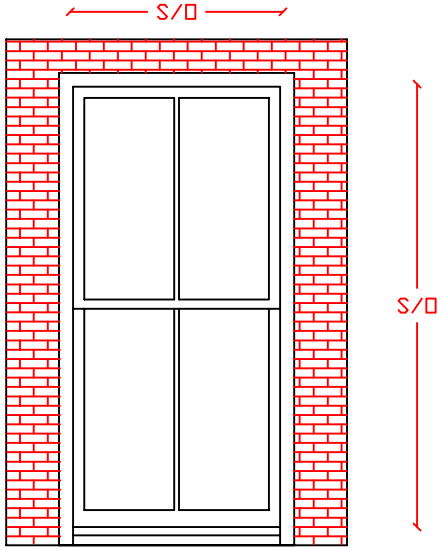

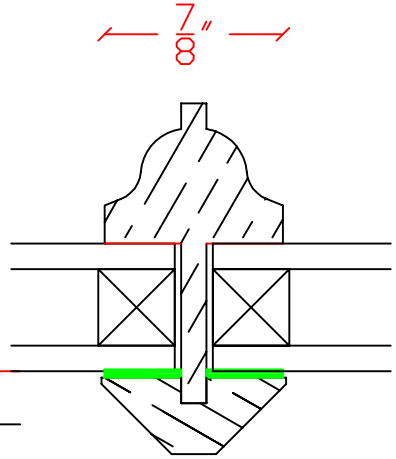

T.D.L. BAR
FULL SCALE

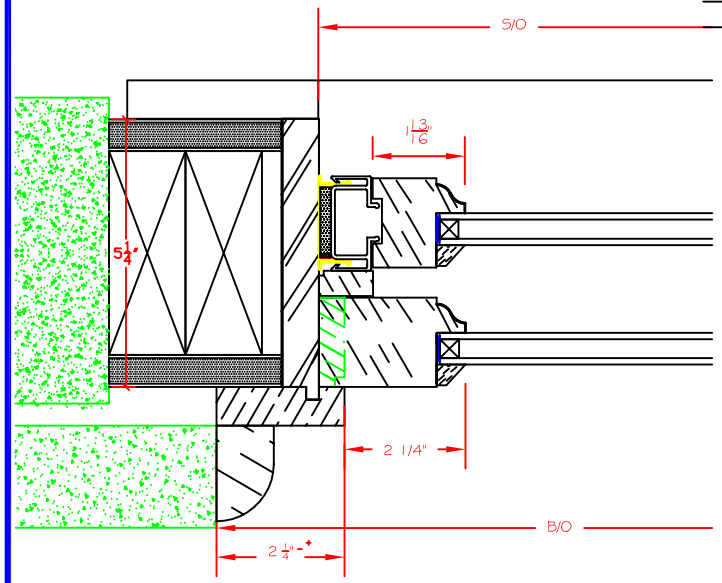

JAMB SECTION

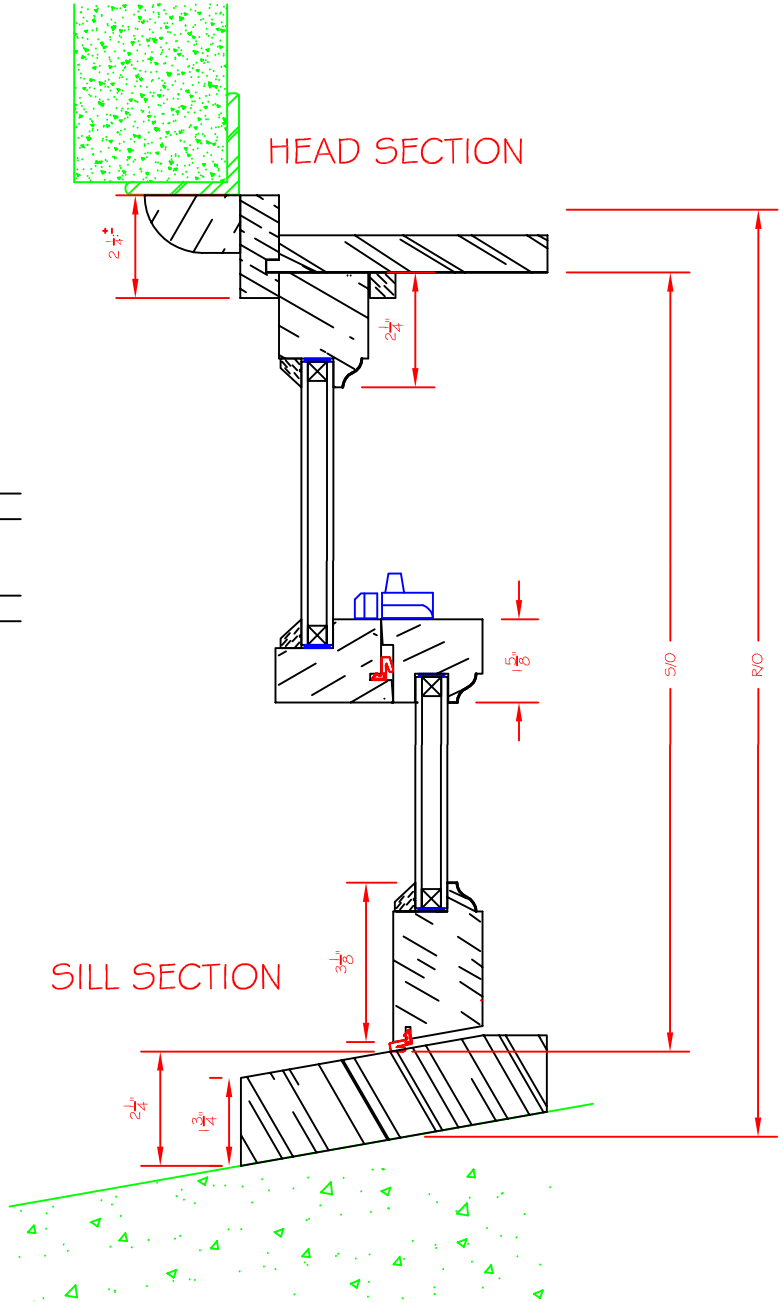

SHEET 1 OF 1

JBPB SH REPL/UNIT - 2/2

DEALER: JB SASH & DOOR CO., INC.
NUMBER:
DRAWN: R.L.B.
DATE: 02/26/16
CHECK:

Click Image to Zoom

ENLARGE

V1996 Kickplates

V-PAC

8" x 34", Brass

Stock # N244-079

Finish:

Selected: Brass

Size:

*Not all sizes are available in all finishes.

- 6" x 30"
- 8" x 34"

+ ADD TO PROJECT LIST

WHERE TO BUY »

Product Overview

- Plate is easy to install
- Plastic cover protects finish during installation
- Includes fasteners
- Aluminum material
- Anodized surface for extra durability

Home Designs
A variety of knobs, pulls, cabinet catches and hinges designed to add the final detail to any kitchen or bathroom.

Package Specifications

V-PAC

Stock #	N244-079
Catalog #	V1996
Material	Aluminum
UPC	038613244078
Quantity Per Package	1
Quantity Per Box	2 PK

Documents

PDF Technical Drawing

IMAGE Line Art

Related Products

LETTER BOX PLATES

MODEL #: 0017.003 FOR #4A DOOR

(http://s7d1.scene7.com/is/image/Baldwin/0017-003-c1?$ProductDetailsEnlarge$)

TAP AND HOLD IMAGE TO ZOOM

Write a review Ask a question

AVAILABLE FINISHES:

Lifetime Polished Brass Letter Box Plate, 10" x 3"

WHERE TO BUY (/WHERE-TO-BUY?HOMEHARDWARE=1)

ADD TO WISH LIST

BALDWIN

6542 - TREMONT
ESTATE HANDLESET

SPECIFICATIONS

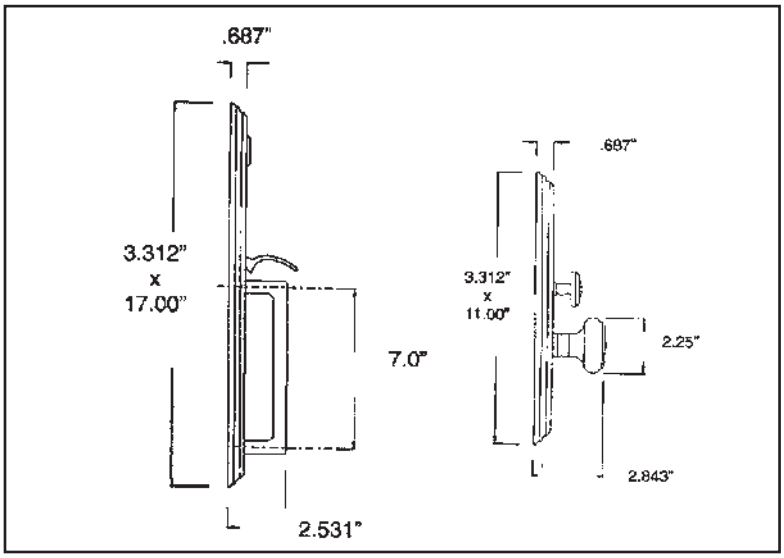

- Certified by Underwriters Laboratories (UL) for use on fire doors up to three-hour rating
- U L10C / UBC 7-2 (1997) Positive Pressure Rated, UL10B Pressure Rated
- Material: Solid Forged Brass

SHOWN WITH KNOB 5020

TIER 1 FINISHES

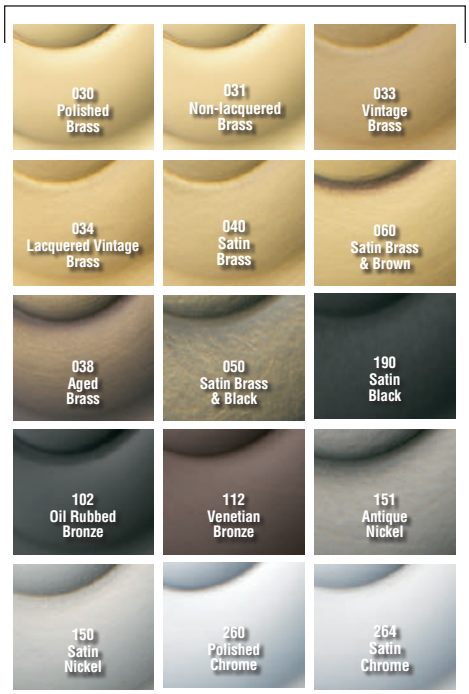

TIER 2 FINISHES

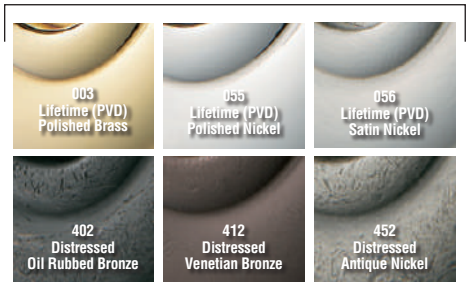

19701 Da Vinci · Lake Forest · California · 92610 · CUSTOMER SERVICE: 800.437.7448 · 8AM - 5PM EST · FAX: 800.255.9785
www.baldwinhardware.com

AX-DV, AX-DVF

Video Door Stations for AX Series

AX-DV

AX-DVF

Dimensions:
9 3/4"H x 5 3/4"W x 1 7/8"D

DESCRIPTION:
The AX-DV is a surface mount color video door station for the AX Series. The AX-DVF is a flush mount color video door station. Both units wire directly to the AX Central Exchange Unit using CAT-5e wire with an RJ45 jack for connection.

The AX-DV has an aluminum die cast cover. The AX-DVF has a stainless steel faceplate. Both units include a camera, microphone, speaker, and call button. Tamper resistant screws are provided for mounting.

When the call button on the door station is pushed, the master station(s) ring and the video monitor comes on with the image from the door station's camera. The master station user then pushes the "TALK" button to initiate communication. The person at the door station speaks hands-free.

The AX door stations can be located up to 980' from the AX CEU and wired with CAT-5e cable. Additional equipment is available to interface with third party hardware for transmission over fiber optic cable or an IP network.

FEATURES:

- Color video camera with audio intercom
- 2-way hands-free voice communication with AX master station
- Call button to initiate call to master(s)
- White LED illuminator for low light conditions
- RJ45 jack for easy CAT-5e connection
- Surface (AX-DV) or flush mount (AX-DVF) styles available
- 980' wiring distance from CEU on CAT-5e cable

Brass cover plate at parlor level entry

Covered with a brass finished housing box at lower entry

Aiphone Corporation
1700 130th Ave NE * Bellevue, WA 98005
Ph: (800) 692-0200 * Fax: (425) 455-0071
tech@aiphone.com

Paint Colors

Benjamin Moore Black 2132-10:
For metal bays @ 2A-4A Milford Street