12 FARNSWORTH STREET REPOSITIONING
BOSTON, MA

NOI DRAWINGS
ISSUED FOR PERMIT
16 FEBRUARY 2022
REVISED 18 FEBRUARY 2022

APPROXIMATE LIMIT OF WORK

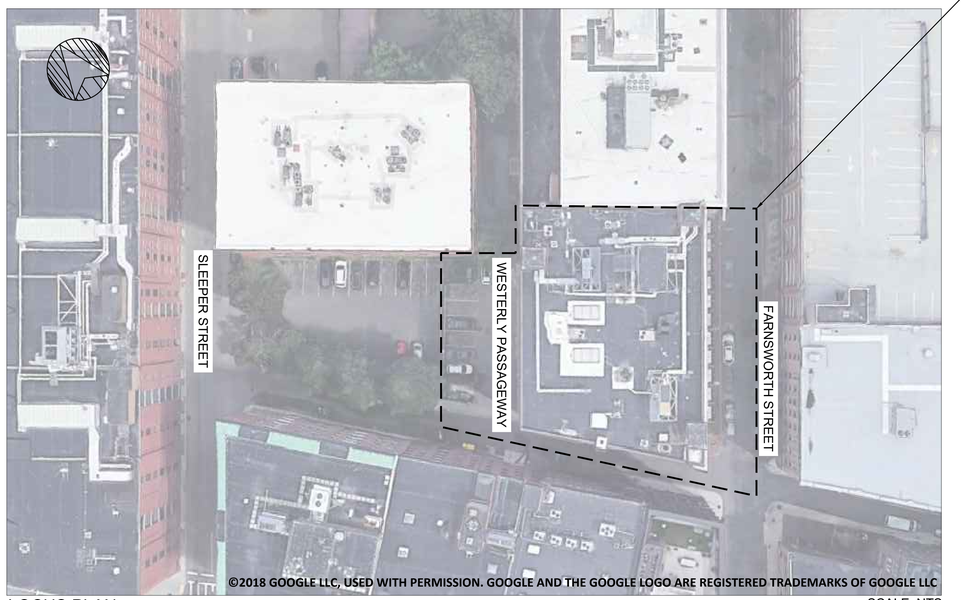

LOCUS PLAN

SCALE: NTS

INDEX

SHEET NO.	DESCRIPTION
CS	COVER SHEET
C001	CIVIL GENERAL NOTES (1 OF 2)
C002	CIVIL GENERAL NOTES (2 OF 2)
-	RECORD CONDITIONS PLAN
C003	EXISTING GROUND COVER PLAN
C100	SITE PREPARATION/E&S CONTROL PLAN
C200	SITE PLAN
C300	GRADING AND UTILITY PLAN
C400	CIVIL DETAILS

ISSUED FOR NOTICE OF INTENT - NOT FOR CONSTRUCTION

Perkins&Will

225 Franklin Street, Suite 1100
Boston, MA 02110
t 617.478.0300
f 617.478.0321
www.perkinswill.com

CONSULTANTS

CIVIL

SGH
SIMPSON GUMPERTZ & HEGER
400 Totten Pond Road
Waltham, MA 02451
781.907.9000
sgh.com

STRUCTURAL

MEPFP

ACOUSTICAL

OWNER

CONTRACTOR

PROJECT

CORE/SHELL RENOVATION

12 FARNSWORTH STREET
BOSTON, MA

PHASE3
REAL ESTATE PARTNERS

PHASE 3

KEYPLAN

TRUE NORTH

11/24/2021

ISSUE CHART

COMMONWEALTH OF MASSACHUSETTS
SEAN P. DONLON, Jr.
CIVIL
No. 40201
REGISTERED PROFESSIONAL ENGINEER

Sean P Donlon Jr

MARK	ISSUE	DATE
2	REVISED NOTICE OF INTENT	02/18/22
1	NOTICE OF INTENT	02/16/22

Job Number

TITLE

COVER SHEET

SHEET NUMBER

CS

© 2020 Perkins and Will

GENERAL CIVIL NOTES:

PART 1 - GENERAL REQUIREMENTS AND DESIGN CRITERIA

1.1 SCOPE OF WORK
- A. PROVIDE TEMPORARY FACILITIES.
- B. INSTALL ALL NECESSARY EROSION AND SEDIMENTATION CONTROLS.
- C. CUT AND CAP ALL UTILITIES SLATED FOR REMOVAL.
- D. TRENCH FOR NEW UTILITIES AND REPLACE ALL SURFACE MATERIALS IN KIND.
- E. INSTALL SUB-SLAB RECHARGE SYSTEM.

1.2 GENERAL
- A. CONTRACTOR IS RESPONSIBLE FOR ALL TEMPORARY WORKS REQUIRED FOR CONSTRUCTION INCLUDING, BUT NOT LIMITED TO, TEMPORARY PEDESTRIAN FACILITIES & TEMPORARY FENCING AND SITE ACCESS. CONTRACTOR TO COORDINATE WITH THE CITY OF BOSTON ON REQUIREMENTS.
- B. CONTRACTOR IS REQUIRED TO PREPARE A STORMWATER POLLUTION PREVENTION PLAN & FILE FOR COVERAGE UNDER THE NPDES CONSTRUCTION GENERAL PERMIT.
- C. DEFICIENT WORK AND/OR WORK NOT IN CONFORMANCE WITH THE CONTRACT DOCUMENTS SHALL BE REPAIRED AT THE CONTRACTOR'S EXPENSE. THE CONTRACTOR SHALL COMPENSATE THE CLIENT FOR SERVICES ARISING FROM DEFICIENT WORK, REVIEW OF MODIFICATIONS/CONTRACTOR SUBSTITUTION, OR EXPEDITING OF SUBMITTALS.
- D. COST OF INVESTIGATION AND/OR REDESIGN INCURRED BY THE ENGINEER OF RECORD DUE TO CONTRACTOR ERRORS WILL BE AT THE CONTRACTOR'S EXPENSE.
- E. ALL CONSTRUCTION SHALL COMPLY WITH APPLICABLE CODES AND LOCAL REQUIREMENTS. CONTRACTOR MUST COMPLY WITH CONTRACTOR REGISTRATION REQUIREMENTS OF ALL GOVERNING AUTHORITIES AND ALL WORKER SAFETY STANDARDS. WORK SHALL NOT COMMENCE UNTIL ALL PERMITS REQUIRED FOR THE SUBJECT PORTION OF THE WORK ARE OBTAINED. IT IS THE CONTRACTOR'S RESPONSIBILITY TO HAVE ALL REQUIRED PERMITS AND/OR EVIDENCE OF COMPLIANCE WITH APPLICABLE REGULATIONS ON SITE AT ALL TIMES DURING THE EXECUTION OF THE WORK. THE CONTRACTOR SHALL BE RESPONSIBLE FOR OBTAINING ANY AND ALL CONSTRUCTION PERMITS NOT FURNISHED BY THE OWNER, PRIOR TO THE START OF ANY CONSTRUCTION. ALL FEES AND PERMITS SHALL BE PAID FOR BY THE CONTRACTOR.
- F. APPROVED PLANS SHALL BE KEPT IN A PLAN BOX. ALL CONSTRUCTION SETS SHALL REFLECT THE SAME INFORMATION. CONTRACTOR SHALL MAINTAIN ONE COMPLETE SET OF PLANS ON THE PREMISES IN GOOD CONDITION AT ALL TIMES. THIS SHALL INCLUDE ALL ADDENDA AND CHANGE ORDERS.
- G. CONTRACTOR IS TO PROTECT ALL SITE FEATURES INDICATED TO REMAIN INCLUDING BUT NOT LIMITED TO CURBS, PAVEMENT, SIGNS, LANDSCAPED AREAS ETC. AND IS TO RESTORE ANY FEATURES THAT ARE DISTURBED BY THE CONTRACTOR'S OPERATIONS TO THEIR ORIGINAL CONDITION OR BETTER.
- H. CONTRACTOR IS RESPONSIBLE FOR TRAFFIC CONTROL WHILE WORKING IN PUBLIC AND PRIVATE ROW OR ADJOINING PROPERTIES. ALL SIGNAGE AND TRAFFIC CONTROL DEVICES SHALL BE PROVIDED IN ACCORDANCE WITH THE FEDERAL HIGHWAY ADMINISTRATIONS MANUAL ON UNIFORM TRAFFIC CONTROL DEVICES, ANY APPLICABLE MASSDOT TRAFFIC CONTROL DESIGN CRITERIA, OR REQUIREMENTS OF THE CITY OF BOSTON AS APPLICABLE.
- I. CONTRACTOR IS SOLELY RESPONSIBLE FOR CONSTRUCTION SAFETY. SPECIAL PRECAUTIONS MAY BE REQUIRED IN THE VICINITY OF POWER LINES AND OTHER UTILITIES.
- J. TRUCKING ON OR ABOUT THE SITE WILL BE PERMITTED ONLY WITHIN REASONABLE LIMITS AND THE CONTRACTOR SHALL NOT UNREASONABLY ENCUMBER THE PREMISES WITH EQUIPMENT AND MATERIALS. THE STORAGE SHALL BE CONFINED TO SUCH LIMITS AS MAY BE JOINTLY AGREED UPON BY MBTA AND CONTRACTOR.
- K. FOR CONSTRUCTION DETAILS NOT SHOWN, USE THE MANUFACTURER'S APPROVED SHOP DRAWINGS / DATA SHEETS IN ACCORDANCE WITH THE PROJECT SPECIFICATIONS AND LOCAL REGULATIONS.
- L. THE CONTRACTOR SHALL BE RESPONSIBLE FOR ESTABLISHING AND MAINTAINING ALL CONTROL POINTS AND BENCHMARKS NECESSARY FOR THE WORK.

1.3 EXISTING CONDITIONS, SURVEY, ELEVATIONS, & DIMENSIONS
- A. ALL DIMENSIONS, ELEVATIONS AND EXISTING CONDITIONS SHALL BE VERIFIED IN THE FIELD BY THE CONTRACTORS AND ANY DISCREPANCIES SHALL BE BROUGHT TO THE ATTENTION OF THE ENGINEER OF RECORD FOR CLARIFICATION BEFORE PROCEEDING WITH THE AFFECTED PART OF THE WORK. DIMENSIONS AND ELEVATIONS NOTED IN THE CONTRACT DOCUMENTS AS (+/-) AND ALL FIELD CONDITIONS SHALL BE VERIFIED IN THE FIELD (VIF) BY THE CONTRACTOR PRIOR TO THE SUBMISSIONS OF SHOP DRAWINGS. UPON RECEIPT OF SHOP DRAWINGS, THE ENGINEER HAS THE RIGHT TO ASSUME THAT ALL FIELD DIMENSIONS, ELEVATIONS AND CONDITIONS HAVE BEEN VERIFIED BY THE CONTRACTOR AND THAT THE SHOP DRAWINGS ACCURATELY REFLECT SUCH VERIFICATIONS UNLESS STATED OTHERWISE ON THE SHOP DRAWINGS. CONTRACTOR SHALL SPECIFY COMPONENTS TO BE CUT TO FIT IN FIELD ON SHOP DRAWINGS.
- B. ALL EXISTING CONDITIONS AND PROPERTY LINE INFORMATION ARE AS TAKEN FROM AN ELECTRONIC CAD FILE PREPARED BY FELDMAN GEOSPATIAL AND DATED OCTOBER 17, 2021.
- C. UTILITIES SHOWN ARE APPROXIMATE ONLY AND WERE INTERPRETED FROM ON-SITE OBSERVATIONS AND RECORD UTILITY INFORMATION WHERE AVAILABLE. FURTHER INVESTIGATION AND SURVEY INFORMATION WILL BE REQUIRED TO VERIFY THE LOCATION, INVERTS, AND CONDITION OF ALL UTILITIES.
- D. ALL ELEVATIONS INDICATED ON PLANS ARE REFERENCED TO BOSTON CITY BASE (BCB) DATUM.
- E. HORIZONTAL DATUM IS BASED ON MASS GRID SYSTEM, NAD 83.
- F. THE SITE WITHIN A FEMA FLOOD ZONE. REEFER TO SGH BASIS OF DESIGN MEMO FOR FLOOD DESIGN ELEVATIONS.

1.4 BUILDING CODES AND REFERENCED STANDARDS
- A. MASSACHUSETTS STATE BUILDING CODE, 9TH EDITION, WHICH ADOPTS AND AMENDS THE 2015 INTERNATIONAL BUILDING CODE AND THE 2015 INTERNATIONAL EXISTING BUILDING CODE.
- B. 2010 STANDARDS FOR ADA DESIGN, DEPARTMENT OF JUSTICE, 15 SEPTEMBER 2010
- C. 521 CMR 5.00, ARCHITECTURAL ACCESS BOARD, DATED 27 JAN 2006

1.5 QUALITY ASSURANCE
- A. THE CONTRACTOR SHALL PERFORM ALL WORK IN STRICT ACCORDANCE WITH ALL APPLICABLE LAWS, AND REGULATIONS OF THE CITY OF BOSTON AND WITH ALL OTHER AUTHORITIES HAVING JURISDICTION. ALL SUCH REQUIREMENTS SHALL TAKE PRECEDENCE OVER THE REQUIREMENTS OF THE SPECIFICATIONS EXCEPT IN CASES WHERE THE REQUIREMENTS OF THE SPECIFICATIONS ARE MORE EXACTING OR STRINGENT.
- B. TESTING OF MATERIALS AND INSPECTIONS OF INSTALLED WORK SHALL BE COMPLETED THROUGHOUT THE DURATION OF THE PROJECT, AS REQUIRED OR DIRECTED BY THE CIVIL EOR AND/OR CITY OF BOSTON. THE CITY RESERVES THE RIGHT TO PERFORM INSPECTIONS AND TESTING AT ANY TIME DURING THE EXECUTION OF WORK. CONTRACTOR SHALL PROVIDE FREE AND SAFE ACCESS TO ALL RECORDS, MATERIAL STOCKPILES, AND FACILITIES FOR THE CIVIL EOR AND/OR CITY INSPECTORS.
- C. THE TESTING AGENCY SHALL SUBMIT THE RESULTS OF ALL REQUIRED EARTHWORKS TESTING TO THE CIVIL EOR AND OWNER'S REPRESENTATIVE FOR REVIEW AND APPROVAL.

PART 2 - SITE PREPARATION AND TEMPORARY EROSION AND SEDIMENTATION CONTROL

2.1 SCOPE OF WORK
- A. INSTALL EROSION AND SEDIMENTATION CONTROL MEASURES AS SHOWN ON THE DRAWINGS.
- B. REMOVE EROSION AND SEDIMENTATION CONTROL MEASURES ONCE ALL SITE WORK IS COMPLETE AND FINAL GROUND COVER IS ESTABLISHED.

2.2 GENERAL
- A. CONTRACTOR TO PERFORM ALL WORK IN ACCORDANCE TO ALL FEDERAL, STATE, AND CITY OF BOSTON REQUIREMENTS.

PART 3 – DEMOLITION, EARTHWORK, AND GRADING

3.1 SCOPE OF WORK
- A. LOCATE ALL EXISTING UTILITY INFRASTRCURE WITHIN AREA(S) OF DEMOLITION. PROVIDE S.U.E. AS INDICATED PRIOR TO INITIATING CONSTRUCTION OF ANY AFFECTED WORK.
- B. REMOVE AND DISPOSE (E) TRANSFORMER, TRANSFORMER PADS AND APPURTENANCES.
- C. INSTALL NEW TRANSFORMER PAD.
- D. SAWCUT, REMOVE & DISPOSE BITUMINOUS CONCRETE AND UNSUITABLE MATERIAL AS INDICATED.
- E. REMOVE DEMOLISHED MATERIALS, SURPLUS SOIL MATERIAL, AND WASTE MATERIALS, INCLUDING TRASH AND DEBRIS, AND LEGALLY DISPOSE THEM OFF SITE.
- F. HANDLE ALL SOILS ACCORDING TO THE SOILS MANAGEMENT PLAN FOR THE SITE AND AS DIRECTED BY THE LSP.
- G. EXCAVATE FOR (E) UTILITIES TO BE CUT AND CAPPED.
- H. MAINTAIN/PROTECT EXISTING EQUIPMENT AS NOTED.
- I. EXCAVATE FOR (P) UTILITIES.
- J. COMPACT SUBGRADE AND INSTALL BACKFILL FOR (P) UTILITIES.
- K. BACKFILL UTILITY TRENCHES.
- L. PERFORM FINE GRADING, PREPARE AND COMPACT SUBGRADE, AND INSTALL AND COMPACT GRAVEL BASE AT SIDEWALK, ASPHALT AREAS, AND CONCRETE PATIO.

3.2 GENERAL
- A. THE CONTRACTOR SHALL NOTIFY THE ENGINEER, THE OWNER, AND UTILITY COMPANIES AT LEAST 48 HOURS BEFORE BEGINNING CONSTRUCTION. THE CONTRACTOR SHALL ALSO NOTIFY DIG-SAFE AT LEAST 72 HOURS PRIOR TO EXCAVATION. DIG-SAFE CAN BE CONTACTED AT 1-888-344-7233, FAX 1-800-322-4844.
- B. DO NOT INTERRUPT UTILITIES SERVING OWNER'S FACILITIES, OR OTHER FACILITIES UNLESS PERMITTED IN WRITING BY OWNER, UTILITY OWNER, AND OWNER OF FACILITIES BEING SERVED BY THE UTILITY. PROVIDE TEMPORARY UTILITY SERVICES AS REQUIRED. MAINTAIN UTILITY SERVICES AT ALL TIMES TO FLOUR BAKERY. THE CONTRACTOR IS TO PREPARE A PLAN FOR REVIEW AND APPROVAL BY THE EOR TO MAINTAIN THE EXISTING UTILITY SERVICES FOR FLOUR.
- C. PROTECT ALL OPEN TRENCHES AND EXCAVATIONS UNLESS IN AREAS OF ACTIVE CONSTRUCTION.
- D. CONTRACTOR IS RESPONSIBLE FOR FIELD LOCATING ALL EXISTING UTILITIES WITHIN PROPOSED AREAS OF EXCAVATION PRIOR TO CONSTRUCTION AND TAKE PRECAUTION TO NOT DAMAGE ANY EXISTING UTILITIES AS PART OF THE PROPOSED WORK.
- E. STOP WORK IN THE VICINITY OF SUSPECTED CONTAMINATED SOIL. IMMEDIATELY NOTIFY THE OWNER & LSP SO THAT APPROPRIATE TESTING AND SUBSEQUENT ACTION CAN BE TAKEN. RESUME WORK IN THE IMMEDIATE VICINITY ONLY UPON DIRECTION BY THE CITY AND LSP.
- F. THE CONTRACTOR SHALL EXERCISE CARE WHEN OPERATING EQUIPMENT ADJACENT TO (E) STRUCTURES SO AS NOT TO CAUSE DAMAGE OR DISPLACEMENT. IF THE CONTRACTOR'S PLACEMENT AND COMPACTION OPERATIONS RESULT IN DAMAGE TO THE STRUCTURES, THE CONTRACTOR SHALL BE REQUIRED TO REPAIR ALL DAMAGE AT NO ADDITIONAL COST TO THE OWNER.
- G. EXCAVATION FOR THE SUB-SLAB RECHARGE SYSTEM AND ANY REQUIRED SHORING IS TO BE DESIGNED AND COORDINATED BY A LICENSED GEOTECHINCAL STRUCTURAL ENGINEER.
- H. UNIFORMLY MOISTEN OR AERATE EACH SUBSEQUENT BACKFILL SOIL LAYER BEFORE COMPACTION TO WITHIN 2% OF OPTIMUM MOISTURE CONTENT. WHEN MOISTURE CONTENT IS EXCESSIVE, DEFER COMPACTION UNTIL THE MATERIAL HAS DRIED TO SUITABLE MOISTURE CONTENT. NATURAL DRYING MAY BE ACCELERATED BY MANIPULATION TO INCREASE THE RATE OF EVAPORATION, OR BY BLENDING SIMILAR MATERIALS FROM A DRY STOCKPILE. IF DRYING IS ACCOMPLISHED BY BLENDING IN A DRY MATERIAL, TAKE CARE NOT TO EXCEED THE SPECIFIED MAXIMUM LAYER THICKNESS FOR COMPACTION. REMOVE ANY EXCESS MATERIAL FROM THE LAYER BEFORE COMPACTION.
- I. PROPOSED GRADES TO BLEND SMOOTHLY WITH EXISTING GRADES.
- J. NO SLOPE SHALL EXCEED A 3:1 SLOPE.

PART 4 - DEWATERING

4.1 SCOPE OF WORK
- A. DEWATERING FOR THIS PROJECT INCLUDES DESIGNING, FURNISHING, INSTALLING, TESTING, OPERATING, MONITORING, AND MAINTAINING DEWATERING SYSTEMS OF SUFFICIENT SCOPE, SIZE, AND CAPACITY TO CONTROL GROUNDWATER LEVELS DURING CONSTRUCTION AND TO LOWER, CONTROL, REMOVE, TREAT, AND DISPOSE OF GROUND WATER AND ALLOW EXCAVATION AND CONSTRUCTION TO PROCEED ON DRY, STABLE SUBGRADES.
- B. DEWATERING SHALL BE INSTALLED AS REQUIRED FOR EARTHWORK OPERATIONS AND ASSOCIATED CONSTRUCTION.
- C. PROVIDE STANDBY EQUIPMENT AND POWER SUPPLY FOR MAINTAINING UNINTERRUPTED CONSTRUCTION DEWATERING.
- D. INSTALL, MEASURE, RECORD, AND REPORT WATER LEVELS IN GROUNDWATER OBSERVATION WELLS.
- E. MONITOR QUALITY OF DISCHARGE FROM DEWATERING SYSTEM TO DETERMINE IF SOIL PARTICLES ARE BEING REMOVED FROM THE SYSTEM.
- F. TAKE MEASURES TO PREVENT DAMAGE TO ADJACENT BUILDINGS, STRUCTURES, UTILITY LINES, AND OTHER WORK RESULTING FROM DEWATERING OPERATIONS. MODIFY THE SYSTEM IF, AFTER INSTALLATION AND WHILE IN OPERATION, IT CAUSES OR THREATENS TO CAUSE DAMAGE TO EXISTING BUILDINGS, STRUCTURES, UTILITIES, OR FACILITIES. REPAIR DAMAGE, DISRUPTION, OR INTERFERENCE RESULTING DIRECTLY OR INDIRECTLY FROM DEWATERING OPERATIONS AS APPROVED BY ITS OWNER.
- G. THE CONTRACTOR SHALL OBTAIN ALL NECESSARY PERMITS FROM STATE AND LOCAL AGENCIES FOR OPERATION OF THE DEWATERING SYSTEM AND DISPOSAL OF THE DEWATERING EFFLUENT.
- H. DESIGN OF DEWATERING AND TREATMENT SYSTEM SHALL BE BY A QUALIFIED PROFESSIONAL ENGINEER, REGISTERED IN THE COMMONWEALTH OF MASSACHUSETTS.
- I. PROVIDE A DEWATERING PLAN. ALL WORK SHALL BE PERFORMED IN ACCORDANCE WITH THE CONTRACTOR'S APPROVED DEWATERING PLAN.
- J. GROUNDWATER LEVELS INSIDE THE EXCAVATION SHALL BE MAINTAINED A MINIMUM OF 2 FT BELOW THE BOTTOM OF EXCAVATION.
- K. COORDINATE ALL DEWATERING WORK WITH EXCAVATION SUPPORT AND PROTECTION SYSTEMS, AND EXCAVATION AS NECESSARY.

PART 5 - DRAINAGE AND SEWER SYSTEMS

5.1 SCOPE OF WORK
- A. CUT AND CAP EXISTING STORM DRAIN LATERAL AT THE MAIN IN FARNSWORTH STREET.
- B. EXCAVATE AND INSTALL RECHARGE SYSTEM, MANHOLE, AND ASSOCIATED PIPING BENEATH THE SLAB.
- C. EXCAVATE TO INSTALL PROPOSED LATERAL AND CONNECT TO MAIN IN FARNSWORTH STREET.

5.2 GENERAL
- A. CONSTRUCTION SHALL PROCEED SUCH THAT ALL STORMWATER FACILITIES WITHIN A WATERSHED AREA ARE IN PLACE AND OPERATIONAL PRIOR TO CONSTRUCTION OF IMPERVIOUS SURFACES WITHIN THAT AREA.

PART 6 - UTILITIES

6.1 SCOPE OF WORK
- A. CUT AND CAP, R&D, AND INSTALL UTILITIES AS SHOWN ON THE DRAWINGS

6.2 GENERAL
- A. THE CONTRACTOR SHALL VERIFY THE LOCATION AND ELEVATION OF ALL UTILITY CONNECTION POINTS SHOWN ON PLAN PRIOR TO STARTING CONSTRUCTION AND SHALL IMMEDIATELY NOTIFY THE ENGINEER AND OWNER OF ANY DISCREPANCIES FOUND.
- B. PROTECT ALL NEW AND EXISTING UTILITIES DURING CONSTRUCTION.
- C. ADJUSTMENT OF INLETS, JUNCTION BOXES, MANHOLE FRAMES, COVERS/GRATES, WATER VALVES, WATER METERS, GAS METERS, ETC., SHALL BE INCLUDED IN THE CONTRACTOR'S BID AND NO CLAIM SHALL BE MADE AGAINST THE OWNER OR ENGINEER FOR THESE ADJUSTMENTS, IF REQUIRED.
- D. ALL UTILITIES SHALL BE KEPT IN OPERATION EXCEPT WITH THE EXPRESS WRITTEN CONSENT OF THE UTILITY OWNER. IT SHALL BE THE CONTRACTOR'S RESPONSIBILITY TO PRESERVE EXISTING UTILITIES AND ANY AND ALL DAMAGE TO EXISTING UTILITIES AS A RESULT OF THE CONTRACTOR'S ACTIONS SHALL BE REPAIRED AT THE CONTRACTOR'S EXPENSE.
- E. ALL UTILITY CONNECTIONS WILL BE IN ACCORDANCE TO BWSC AND OTHER AGENCIES HAVING JURISDICTION REQUIREMENTS AND STANDARDS. PROPOSED UTILITY CONNECTIONS REQUIRE EOR AND AGENCY REVIEW AND APPROVAL PRIOR TO UNDERTAKING WORK.

PART 7 - HMA PAVEMENT

7.1 SCOPE OF WORK
- A. PATCHING THE HMA PAVEMENT DUE TO UTILITY INSTALLATION.

7.2 STANDARD SPECIFICATIONS AND REFERENCE STANDARDS
- A. REFER TO MASSDOT STANDARD SPECIFICATIONS FOR HIGHWAYS AND BRIDGES 1988.
- B. REFER TO MASSDOT SUPPLEMENTAL SPECIFICATIONS TO THE STANDARD SPECIFICATIONS FOR HIGHWAYS AND BRIDGES.
- C. REFER TO MASSDOT 2016 INTERIM SUPPLEMENTAL SPECIFICATIONS.
- D. REFER TO CITY OF BOSTON DEPARTMENT OF PUBLIC WORKS STANDARDS AND REQUIREMENTS.

ISSUED FOR NOTICE OF INTENT - NOT FOR CONSTRUCTION

Perkins&Will

225 Franklin Street, Suite 1100
Boston, MA 02110
t 617.478.0300
f 617.478.0321
www.perkinswill.com

CONSULTANTS

CIVIL: SGH
SIMPSON GUMPERTZ & HEGER
400 Totten Pond Road
Waltham, MA 02451
t 781.907.9000
sgh.com

STRUCTURAL

MEPFP

ACOUSTICAL

OWNER

CONTRACTOR

PROJECT

CORE/SHELL RENOVATION

12 FARNSWORTH STREET
BOSTON, MA

PHASE3 REAL ESTATE PARTNERS

PHASE 3

KEYPLAN

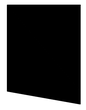

TRUE NORTH

11/24/2021

ISSUE CHART

COMMONWEALTH OF MASSACHUSETTS
SEAN P DONLON, Jr.
CIVIL
No. 49201
REGISTERED PROFESSIONAL ENGINEER

Sean P Donlon Jr.

MARK	ISSUE	DATE
2	REVISED NOTICE OF INTENT	02/18/22
1	NOTICE OF INTENT	02/16/22

Job Number

TITLE

CIVIL GENERAL NOTES (1 OF 2)

SHEET NUMBER

C001

© 2020 Perkins and Will

GENERAL CIVIL NOTES (CONTINUED):

PART 7 - VGC AND CONCRETE SIDEWALKS

7.1 SCOPE OF WORK
- A. INSTALL VGC
- B. INSTALL CONCRETE ACCESSIBLE RAMPS AND WALKWAYS
- C. INSTALL MISC. CONCRETE RELATED PRODUCTS AS INDICATED ON THE DRAWINGS

7.2 CONCRETE MIX PROPERTIES

A. MIX
1. 5,000 PSI 28 DAY MINIMUM COMPRESSIVE STRENGTH
2. 0.40 MAXIMUM WATER TO CEMENT RATIO
3. ½ IN. MAXIMUM SIZE AGGREGATE.
4. 6.5% +/- 1.5% AIR CONTENT
5. EXPOSURE CATEGORIES & CLASSES: F3, S0, W1, C2

B. DENSITY
1. NORMAL WEIGHT DENSITY = 145 PCF

C. CEMENTITIOUS MATERIALS
1. PORTLAND CEMENT: ASTM C150, TYPE II.
2. FLY ASH: ASTM C 618, CLASS F
3. SLAG CEMENT: ASTM C 989 GRADE 100 OR 120

D. NORMAL-WEIGHT AGGREGATES: ASTM C 33, CLASS 4S COARSE AGGREGATE OR BETTER, GRADED. PROVIDE AGGREGATES FROM A SINGLE SOURCE WITH DOCUMENTED SERVICE RECORD DATA OF AT LEAST 10 YEARS' SATISFACTORY SERVICE IN SIMILAR APPLICATIONS AND SERVICE CONDITIONS USING SIMILAR AGGREGATES AND CEMENTITIOUS MATERIALS.

E. AGGREGATE: FREE OF MATERIALS WITH DELETERIOUS REACTIVITY TO ALKALI IN CEMENT PER ASTM C33 (CLASS 4S)

F. ADMIXTURES: CERTIFIED BY MANUFACTURER TO BE COMPATIBLE WITH OTHER ADMIXTURES AND THAT DO NOT CONTRIBUTE WATER SOLUBLE CHLORIDE IONS EXCEEDING THOSE PERMITTED IN HARDENED CONCRETE. DO NOT USE CALCIUM CHLORIDE OR ADMIXTURES CONTAINING CALCIUM CHLORIDE. SEE SPECIFICATION SECTION 03300-CIP CONCRETE FOR REQUIREMENTS

G. WATER: ASTM C 94/C 94M AND POTABLE

7.3 STEEL REINFORCEMENT
- A. WELDED WIRE REINFORCEMENT CONFORMING TO ASTM A1054
- B. REINFORCING BARS CONFORMING TO ASTM A615 GRADE 60

7.4 MINIMUM CONCRETE CLEAR COVER

A.	CONCRETE PLACED AGAINST EARTH	3 IN.
B.	CONCRETE EXPOSED TO EARTH	2-1/2 IN.

7.5 CONCRETE PROTECTION AND CURING
- A. GENERAL: PROTECT FRESHLY PLACED CONCRETE FROM PREMATURE DRYING AND EXCESSIVE COLD OR HOT TEMPERATURES. COMPLY WITH ACI 306.1 FOR COLD-WEATHER PROTECTION AND ACI 305.1 FOR HOT-WEATHER PROTECTION DURING CURING.
- B. CURE CONCRETE ACCORDING TO ACI 308.1, BY ONE OR A COMBINATION OF THE FOLLOWING METHODS: MOISTURE RETAINING COVER AND/OR ABSORPTIVE COVER, WATER SATURATED, AND KEPT CONTINUOUSLY WET.

7.6 STANDARD SPECIFICATIONS AND REFERENCE STANDARDS
- A. CRSI MANUAL OF STANDARD PRACTICE
- B. ACI 318-14 - BUILDING CODE REQUIREMENTS FOR STRUCTURAL CONCRETE
- C. FOLLOW THE LATEST RECOMMENDATIONS AND SPECIFICATIONS OF THE AMERICAN CONCRETE INSTITUTE:

1. ACI 301 SPECIFICATIONS FOR STRUCTURAL CONCRETE
2. ACI 302 CONCRETE FLOOR AND SLAB CONSTRUCTION
3. ACI 304 GUIDE FOR MEASURING, MIXING, TRANSPORTING AND PLACING CONCRETE
4. ACI 305 HOT WEATHER CONCRETING
5. ACI 306 COLD WEATHER CONCRETING
6. ACI 315 ACI DETAILING MANUAL
7. ACI 347 GUIDE TO FORMWORK FOR CONCRETE

ISSUED FOR NOTICE OF INTENT - NOT FOR CONSTRUCTION

Perkins&Will

225 Franklin Street, Suite 1100
Boston, MA 02110
t 617.478.0300
f 617.478.0321
www.perkinswill.com

CONSULTANTS

CIVIL
SGH
SIMPSON GUMPERTZ & HEGER
450 Totten Pond Rd
Waltham, MA 02451
781.907.9000
sgh.com

STRUCTURAL

MEPFP

ACOUSTICAL

OWNER

CONTRACTOR

PROJECT

CORE/SHELL RENOVATION

12 FARNSWORTH STREET
BOSTON, MA

PHASE3
REAL ESTATE PARTNERS

PHASE 3

KEYPLAN

TRUE NORTH

11/24/2021

ISSUE CHART

COMMONWEALTH OF MASSACHUSETTS
SEAN P DONLON, Jr.
CIVIL
No. 45201
REGISTERED PROFESSIONAL ENGINEER

Sean P Donlon Jr

MARK	ISSUE	DATE
2	REVISED NOTICE OF INTENT	02/18/22
1	NOTICE OF INTENT	02/16/22

Job Number

TITLE

CIVIL GENERAL NOTES (2 OF 2)

SHEET NUMBER

C002

© 2020 Perkins and Will

LEGEND

- SEWER MANHOLE
- DRAIN MANHOLE
- ELECTRIC MANHOLE
- TELEPHONE MANHOLE
- CABLE TELEVISION MANHOLE
- MANHOLE
- WATER SHUT OFF
- GAS SHUT OFF
- CATCH BASIN
- LIGHT POLE
- ELECTRIC HANDHOLE
- BOLLARD
- MAIL BOX
- SIGN
- SECURITY CAMERA
- STAND PIPE/SIAMESE CONNECTION
- TRANSFORMER
- BOLLARD
- AD — AREA DRAIN
- RD — ROOF DRAIN
- DECIDUOUS TREE

BH	BUILDING HEIGHT
BFA	BUILDING FOOTPRINT AREA
BIT	BITUMINOUS
BK	BACK
BR	BIKE RACK
[X.X']	BUILDING DIMENSION
(C)	CALCULATED
COB	COBBLESTONE
CONC	CONCRETE
CC	CONCRETE CURB
ENT	ENTRANCE
FFE	FINISH FLOOR ELEVATION
FGC	FLUSH GRANITE CURB
GD	GARAGE DOOR
I=	INVERT ELEVATION
INACC.	INACCESSIBLE
LD	LOADING DOCK
LST	LANDSCAPE TIMBER
MTL	METAL
OV	OVER
POB	POINT OF BEGINNING
POC	POINT OF COMMENCEMENT
(R)	RECORD
SQ. FT.	SQUARE FEET
TR	TRANSFORMER
TBM	TEMPORARY BENCH MARK
TOW	TOP OF WATER
TT=	TOP OF TRAP
LD	LOADING DOCK
VGC	VERTICAL GRANITE CURB
(X)	EXCEPTION NUMBER LISTED IN TITLE COMMITMENT
Z	INDICATES COMMON OWNERSHIP
(X)	NUMBER OF PARKING SPACES
—X——X—	METAL FENCE
——D——	DRAIN
——E——	ELECTRIC
——G——	GAS
——S——	SEWER
——T——	TELEPHONE
——W——	WATER
——CI——	CAST IRON
——12"D(CI)——	PIPE SIZE AND MATERIAL
——RCP——	REINFORCED CONCRETE PIPE
—▫—▫—▫—▫—	METAL RAILING

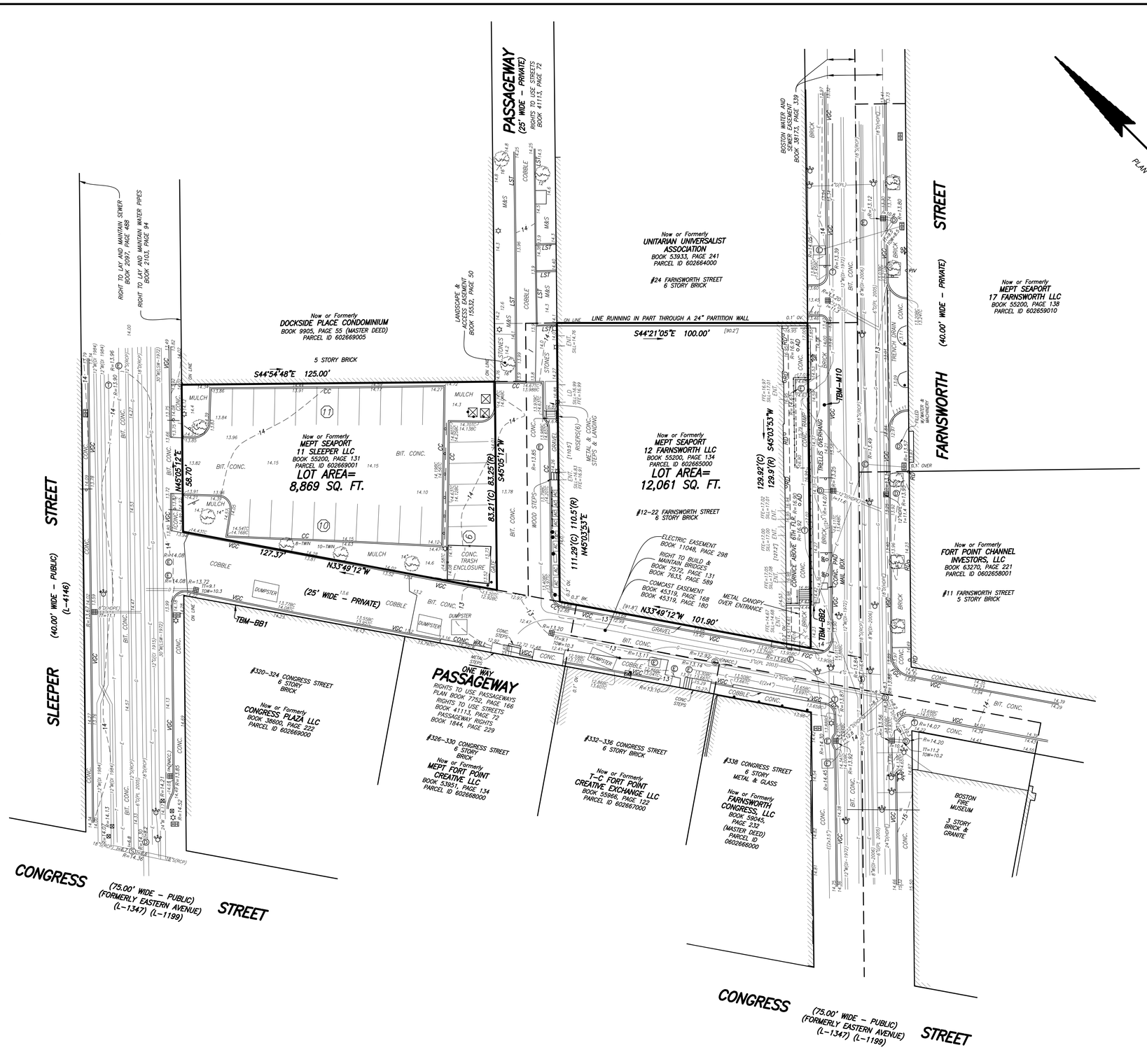

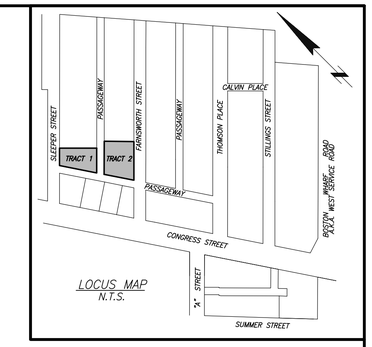

LOCUS MAP
N.T.S.

NOTES:

1. BENCH MARK INFORMATION:
2. ELEVATIONS ESTABLISHED BY GPS.

   TEMPORARY BENCH MARKS SET:

   TBM–BB1: TOP OF WINDOW SILL OF #320–#324 CONGRESS STREET ON NORTH FACE OF BUILDING 20.5' FROM NORTHWESTERLY CORNER OF BUILDING, APPROXIMATELY 2.75' ABOVE SIDEWALK GRADE, AS SHOWN HEREON. ELEVATION=16.96

   TBM–M10: TOP OF MAG NAIL SET IN BRICK SIDEWALK ON NORTHWESTERLY SIDE OF FARNSWORTH STREET IN FRONT OF #12 FARNSWORTH STREET AND APPROXIMATELY 32' FROM THE MOST SOUTHERLY CORNER OF #24 FARNSWORTH STREET AS SHOWN HEREON. ELEVATION =14.40.
3. ELEVATIONS REFER TO BOSTON CITY BASE (BCB).
4. UTILITY INFORMATION SHOWN IS BASED ON BOTH A FIELD SURVEY AND PLANS OF RECORD. THE LOCATIONS OF UNDERGROUND PIPES AND CONDUITS HAVE BEEN DETERMINED FROM THE AFOREMENTIONED RECORD PLANS AND ARE APPROXIMATE ONLY. WE CANNOT ASSUME RESPONSIBILITY FOR DAMAGES INCURRED AS A RESULT OF UTILITIES THAT ARE OMITTED OR INACCURATELY SHOWN ON SAID RECORD PLANS, SINCE SUBSURFACE UTILITIES CANNOT BE VISIBLY VERIFIED. BEFORE PLANNING FUTURE CONNECTIONS, THE PROPER UTILITY ENGINEERING DEPARTMENT SHOULD BE CONSULTED AND THE ACTUAL LOCATION OF SUBSURFACE STRUCTURES SHOULD BE DETERMINED IN THE FIELD. CALL, TOLL FREE, THE DIG SAFE CALL CENTER AT 1–888–344–7233 SEVENTY–TWO HOURS PRIOR TO EXCAVATION.
5. THIS DOCUMENT IS AN INSTRUMENT OF SERVICE OF FELDMAN GEOSPATIAL ISSUED TO OUR CLIENT FOR PURPOSES RELATED DIRECTLY AND SOLELY TO FELDMAN GEOSPATIAL'S SCOPE OF SERVICES UNDER CONTRACT TO OUR CLIENT FOR THIS PROJECT. ANY USE OR REUSE OF THIS DOCUMENT FOR ANY REASON BY ANY PARTY FOR PURPOSES UNRELATED DIRECTLY AND SOLELY TO SAID CONTRACT SHALL BE AT THE USER'S SOLE AND EXCLUSIVE RISK AND LIABILITY, INCLUDING LIABILITY FOR VIOLATION OF COPYRIGHT LAWS, UNLESS WRITTEN CONSENT IS PROVIDED BY FELDMAN GEOSPATIAL.

COMMONWEALTH OF MASSACHUSETTS
TIMOTHY R. AGURKIS
No.52782
REGISTERED PROFESSIONAL LAND SURVEYOR

I CERTIFY THAT THIS PLAN IS BASED ON AN ACTUAL FIELD SURVEY AND THE LATEST PLANS AND DEEDS OF RECORD.

TIMOTHY R. AGURKIS, PLS (MA# 52782) — 10/17/21 DATE
TRA@FELDMANSURVEYORS.COM

EXISTING CONDITIONS PLAN

11 SLEEPER STREET
12 FARNSWORTH STREET
BOSTON, (SOUTH BOSTON) MASS.
(SUFFOLK COUNTY)

FELDMAN GEOSPATIAL
152 HAMPDEN STREET
BOSTON, MASS. 02119

OCTOBER 17, 2021
PHONE: (617)357–9740
www.feldmansurveyors.com

FELDMAN GEOSPATIAL

20 0 10 20 40 80

SCALE: 1"=20'

RESEARCH MJB	FIELD CHIEF BB	PROJ MGR TRA	APPROVED TRA	SHEET NO. 1 OF 1	
CALC MJB	CADD SPP	FIELD CHECKED	CRD FILE 2100728	JOB NO. 2100728	

FILENAME: S:\PROJECTS\2021\2100728\DWG\2100728-EC – C3D.dwg

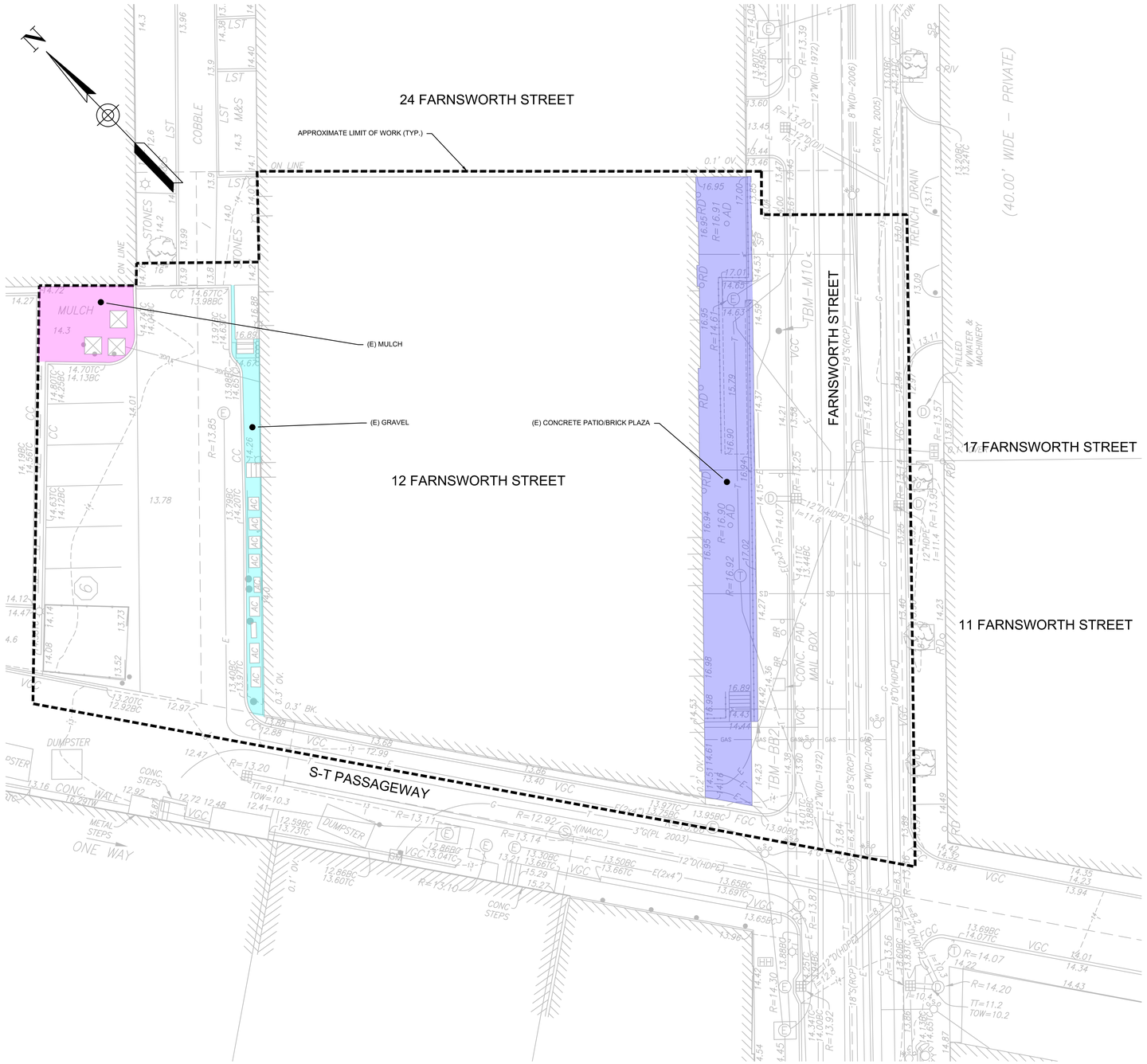

12 FARNSWORTH STREET PLAN VIEW

1" = 10'

NOTES:

1. EXISTING CONDITIONS INFORMATION IS BASED ON A SURVEY PREPARED BY FELDMAN GEOSPATIAL TITLED "11 SLEEPER STREET, 12 FARNSWORTH STREET", DATED 17 OCTOBER 2021.
2. THE ENTIRE PROJECT SITE IS LOCATED WITHIN FLOOD ZONE AE (100-YEAR FLOODPLAIN) PER FEMA FIRM MAP 25025C0081J DATED 16 MARCH 2016.

0 10 20 30 40

SCALE: 1" = 10'

LEGEND

(E) MULCH

(E) GRAVEL

(E) CONCRETE PATIO/BRICK SIDEWALK

ISSUED FOR NOTICE OF INTENT - NOT FOR CONSTRUCTION

225 Franklin Street, Suite 1100
Boston, MA 02110
t 617.478.0300
f 617.478.0321
www.perkinswill.com

CONSULTANTS

CIVIL

SGH
SIMPSON GUMPERTZ & HEGER
400 Totten Pond Road
Waltham, MA 02451
781.907.9000
sgh.com

STRUCTURAL

MEPFP

ACOUSTICAL

OWNER

CONTRACTOR

PROJECT

CORE/SHELL RENOVATION

12 FARNSWORTH STREET
BOSTON, MA

PHASE 3

KEYPLAN

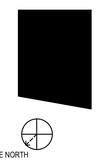

11/24/2021

ISSUE CHART

Sean P Donlon Jr.

MARK	ISSUE	DATE
2	REVISED NOTICE OF INTENT	02/18/22
1	NOTICE OF INTENT	02/16/22

Job Number

TITLE

EXISTING GROUND COVER PLAN

SHEET NUMBER

C003

© 2020 Perkins and Will

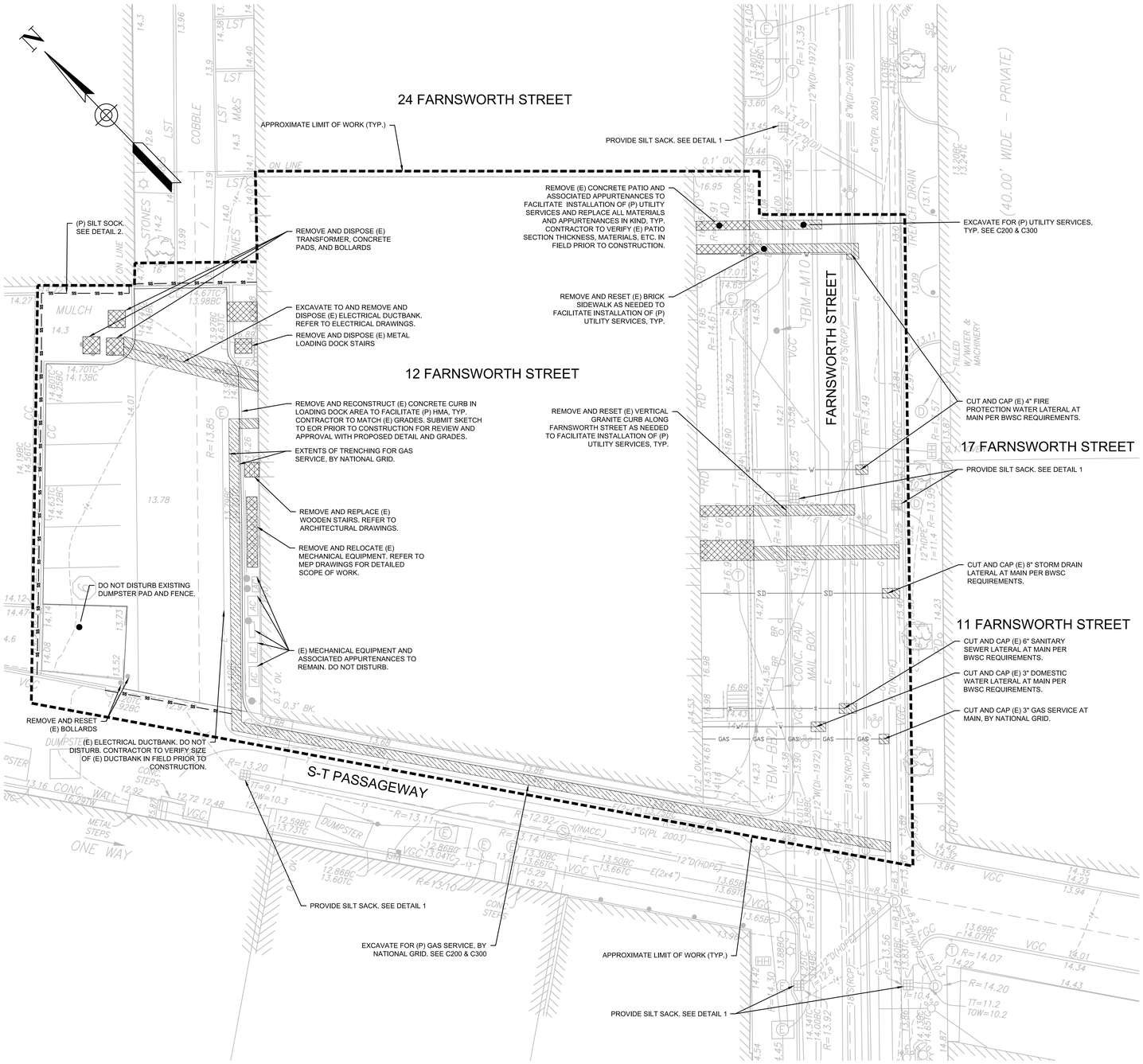

12 FARNSWORTH STREET PLAN VIEW

1" = 10'

0 10 20 30 40

SCALE: 1" = 10'

NOTES:

1. EXISTING CONDITIONS INFORMATION IS BASED ON A SURVEY PREPARED BY FELDMAN GEOSPATIAL TITLED "11 SLEEPER STREET, 12 FARNSWORTH STREET", DATED 17 OCTOBER 2021.
2. ALL PROPOSED ABANDONING OF BWSC UTILITIES WILL BE PERFORMED IN ACCORDANCE WITH ALL BWSC STANDARDS AND REQUIREMENTS. DETAILED SCOPE OF WORK IS PENDING REVIEW AND APPROVAL BY BWSC AS PART OF THE SITE PLAN REVIEW PROCESS.
3. CONTRACTOR IS TO VERIFY LOCATION OF EXISTING UTILITIES WITH A SUBSURFACE UTILITY ENGINEERING SURVEY AND NOTIFY EOR OF ANY DISCREPANCIES PRIOR TO UNDERTAKING AFFECTED WORK.
4. ALL EXISTING UTILITY MAINS ARE TO REMAIN AND NOT BE DISTURBED. CONTRACTOR IS RESPONSIBLE FOR TEMPORARY UTILITY SUPPORT AS NEEDED.
5. THE ENTIRE PROJECT SITE IS LOCATED WITHIN FLOOD ZONE AE (100-YEAR FLOODPLAIN) PER FEMA FIRM MAP 25025C0081J DATED 16 MARCH 2016.

LEGEND

SS SS	(P) SILT SOCK
	(P) STOCKPILE AREA DURING CONSTRUCTION
	(P) UNCLASSIFIED DEMO
	(P) MISCELLANEOUS SITE FEATURE DEMO
	(P) FULL DEPTH HMA DEMO

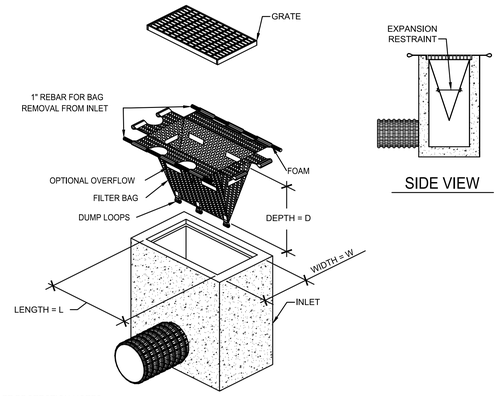

INLET PROTECTION NOTES:

A. INSTALLATION: THE CATCH BASIN FILTER PRODUCT SHOULD BE PLACED UNDER THE GRATE. INSTALL FOAM BLOCK TO BLOCK CURB INLET OPENING IF APPLICABLE. FOLLOW ALL MANUFACTURES RECOMMENDATIONS FOR INSTALLATION AND REMOVAL.
B. MAINTENANCE: REMOVE ALL ACCUMULATED SEDIMENT AND DEBRIS FROM SURFACE AND VICINITY OF UNIT AFTER EACH STORM EVENT. REMOVE SEDIMENT THAT HAS ACCUMULATED WITHIN THE CONTAINMENT AREA AS NEEDED. IF USING OPTIONAL OIL ABSORBENTS; REMOVE AND REPLACE ABSORBENT PILLOW WHEN NEAR SATURATION.
C. SUBSTITUTIONS WILL BE ALLOWED ONLY UPON APPROVAL BY THE ENGINEER.

1 SILT SACK

NTS

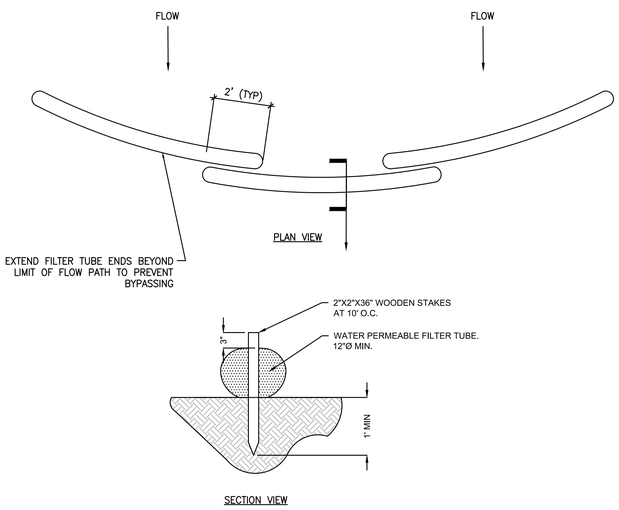

NOTES:

1. CONTRACTOR TO SUBMIT PRODUCT FOR APPROVAL PRIOR TO CONSTRUCTION.
2. INSTALL ACCORDING TO MANUFACTURERS RECOMMENDATIONS.
3. FOR CONCRETE OR ASPHALT SURFACES SAND BAGS SHALL BE INSTALLED AS REQUIRED OR PER MANUFACTURERS RECOMMENDATION FOR ANCHORAGE.

2 SILT SOCK

NTS

ISSUED FOR NOTICE OF INTENT - NOT FOR CONSTRUCTION

225 Franklin Street, Suite 1100
Boston, MA 02110
t 617.478.0300
f 617.478.0321
www.perkinswill.com

CONSULTANTS

CIVIL

SGH
SIMPSON GUMPERTZ & HEGER
400 Totten Pond Road
Waltham, MA 02451
781.907.9000
sgh.com

STRUCTURAL

MEPFP

ACOUSTICAL

OWNER

CONTRACTOR

PROJECT

CORE/SHELL RENOVATION

12 FARNSWORTH STREET
BOSTON, MA

PHASE 3

KEYPLAN

TRUE NORTH

11/24/2021

ISSUE CHART

COMMONWEALTH OF MASSACHUSETTS
SEAN P. DONLON, Jr.
CIVIL
No. 49201
REGISTERED PROFESSIONAL ENGINEER

Sean P Donlon

MARK	ISSUE	DATE
2	REVISED NOTICE OF INTENT	02/16/22
1	NOTICE OF INTENT	02/10/22

Job Number

TITLE

SITE PREPARATION/ E&S CONTROL PLAN

SHEET NUMBER

C100

© 2020 Perkins and Will

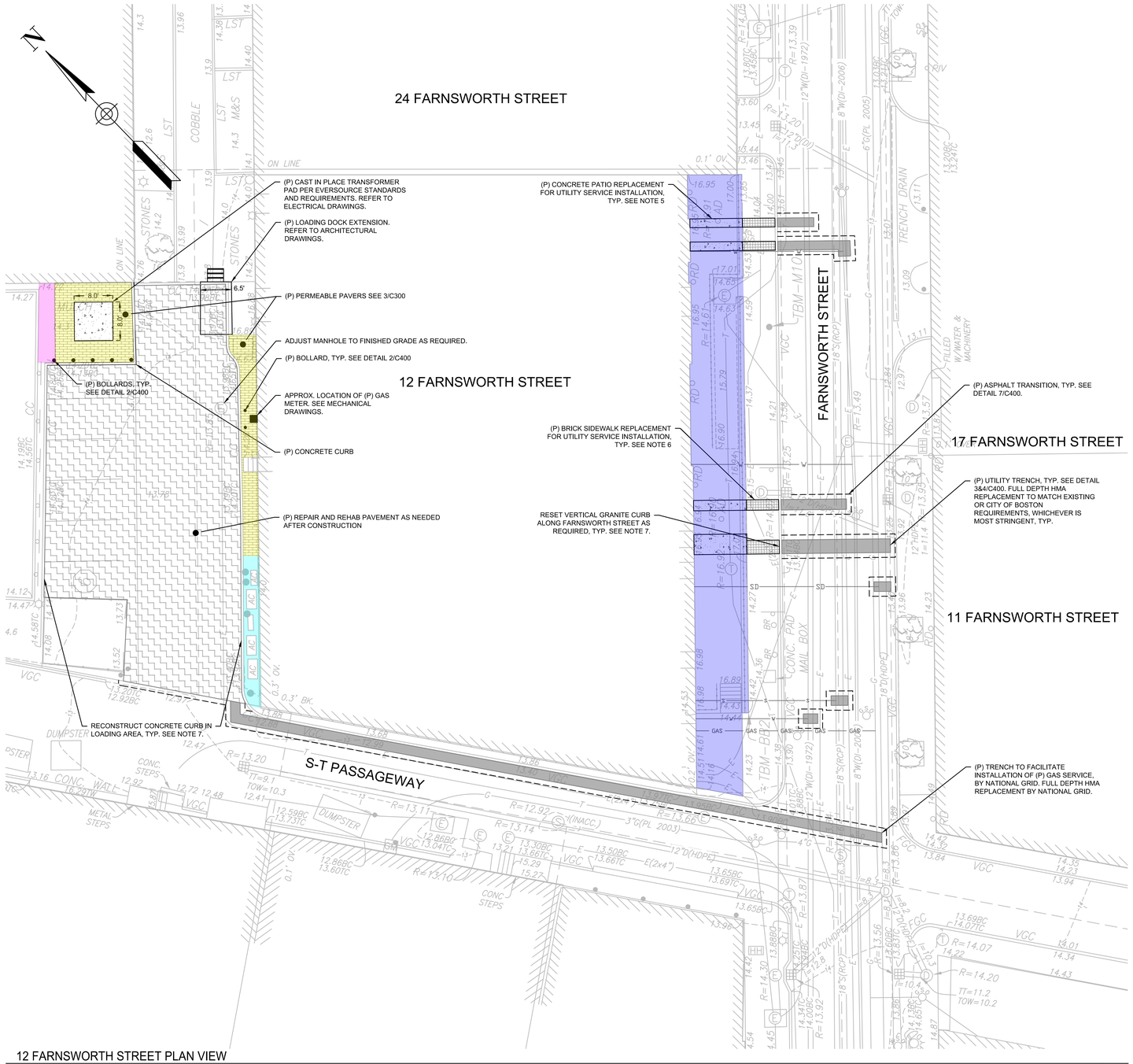

12 FARNSWORTH STREET PLAN VIEW

1" = 10'

0 10 20 30 40

SCALE: 1" = 10'

NOTES:

1. EXISTING CONDITIONS INFORMATION IS BASED ON A SURVEY PREPARED BY FELDMAN GEOSPATIAL TITLED "11 SLEEPER STREET, 12 FARNSWORTH STREET", DATED 17 OCTOBER 2021.
2. ALL PAVEMENT REPLACEMENT WILL BE IN ACCORDANCE WITH THE CITY OF BOSTON DEPARTMENT OF PUBLIC WORKS STANDARDS AND SPECIFICATIONS. THE PROPOSED PAVEMENT SECTION IS TO MATCH EXISTING OR MEET ALL APPLICABLE REQUIREMENTS, WHICHEVER IS MORE STRINGENT. CONTRACTOR TO SUBMIT SKETCH OF EXISTING SECTION AND PROPOSED SECTION TO EOR FOR REVIEW AND APPROVAL PRIOR TO UNDERTAKING AFFECTED WORK. CONTRACTOR IS TO MATCH EXISTING GRADES AND PREPARE SKETCH AND SUBMIT TO EOR FOR REVIEW AND APPROVAL PRIOR TO UNDERTAKING AFFECTED WORK.
3. CONTRACTOR IS TO VERIFY LOCATION OF EXISTING UTILITIES WITH A SUBSURFACE UTILITY ENGINEERING SURVEY AND NOTIFY EOR OF ANY DISCREPANCIES PRIOR TO UNDERTAKING AFFECTED WORK.
4. ALL EXISTING UTILITY MAINS ARE TO REMAIN AND NOT BE DISTURBED. CONTRACTOR IS RESPONSIBLE FOR TEMPORARY UTILITY SUPPORT AS NEEDED.
5. PROPOSED CONCRETE PATIO SECTION IS TO MATCH EXISTING SECTION. SURFACE MATERIALS, COLORS, AND GRADES ARE TO MATCH EXISTING. CONTRACTOR TO SUBMIT SKETCH TO EOR AND ARCHITECT FOR REVIEW AND APPROVAL PRIOR TO UNDERTAKING AFFECTED WORK.
6. PROPOSED BRICK SIDEWALK SECTION, ORIENTATION COLORS, AND GRADES ARE TO MATCH EXISTING SECTION. CONTRACTOR TO SALVAGE EXISTING BRICKS TO THE MAXIMUM EXTENT PRACTICABLE. CONTRACTOR TO SUBMIT SKETCH TO EOR AND ARCHITECT FOR REVIEW AND APPROVAL PRIOR TO UNDERTAKING AFFECTED WORK.
7. VERTICAL GRANITE CURBING SECTIONS AND CONCRETE CURBING SECTIONS REQUIRED TO BE RESET OR RECONSTRUCTED ARE TO MATCH EXISTING GRADE , SECTION, AND REVEAL. CONTRACTOR TO SUBMIT SKETCH TO EOR FOR REVIEW AND APPROVAL PRIOR TO UNDERTAKING AFFECTED WORK.
8. THE ENTIRE PROJECT SITE IS LOCATED WITHIN FLOOD ZONE AE (100-YEAR FLOODPLAIN) PER FEMA FIRM MAP 25025C0081J DATED 16 MARCH 2016.

LEGEND

- (P) CONCRETE
- (P) BRICK SIDEWALK
- (P) FULL DEPTH PAVEMENT
- (P) PERMEABLE PAVERS
- (E) GRAVEL
- (E) MULCH
- (E) CONCRETE PATIO/BRICK SIDEWALK
- REPAIR AND REHAB (E) HMA AS NEEDED

ISSUED FOR NOTICE OF INTENT - NOT FOR CONSTRUCTION

225 Franklin Street, Suite 1100
Boston, MA 02110
t 617.478.0300
f 617.478.0321
www.perkinswill.com

CONSULTANTS

CIVIL

SGH
SIMPSON GUMPERTZ & HEGER
400 Totten Pond Road
Waltham, MA 02451
781.907.9000
sgh.com

STRUCTURAL

MEPFP

ACOUSTICAL

OWNER

CONTRACTOR

PROJECT

CORE/SHELL RENOVATION

12 FARNSWORTH STREET
BOSTON, MA

PHASE 3

KEYPLAN

TRUE NORTH

11/24/2021

ISSUE CHART

COMMONWEALTH OF MASSACHUSETTS
SEAN P. DONLON, JR.
CIVIL
No. 49201
REGISTERED PROFESSIONAL ENGINEER

Sean P Donlon

MARK	ISSUE	DATE
2	REVISED NOTICE OF INTENT	02/18/22
1	NOTICE OF INTENT	02/15/22

Job Number

TITLE

SITE PLAN

SHEET NUMBER

C200

© 2020 Perkins and Will

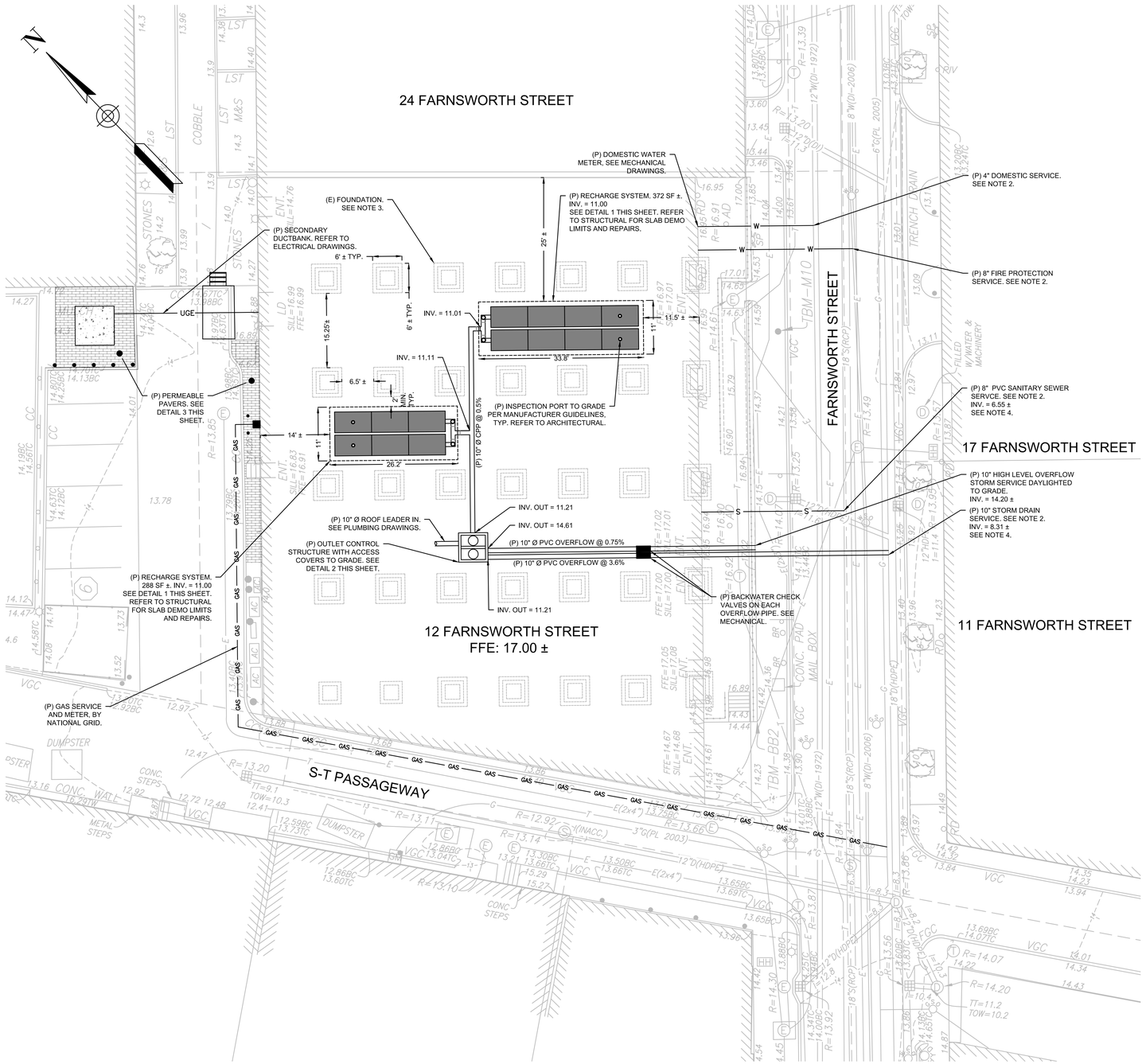

12 FARNSWORTH STREET PLAN VIEW

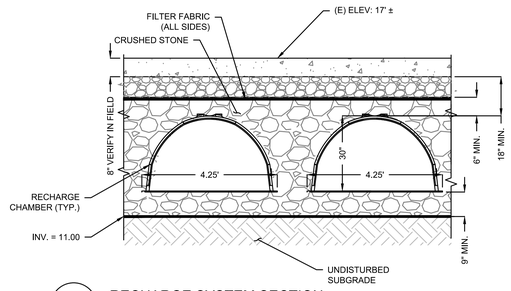

1 RECHARGE SYSTEM SECTION

NTS

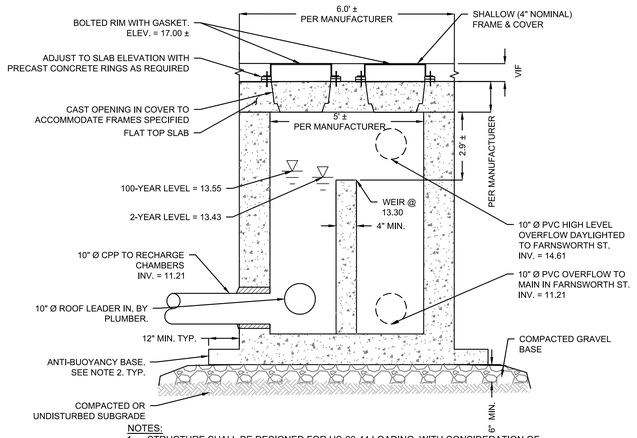

NOTES:

1. STRUCTURE SHALL BE DESIGNED FOR HS-20-44 LOADING, WITH CONSIDERATION OF PENETRATIONS, AND SHALL COMPLY WITH ASTM C478.
2. STRUCTURE SHALL BE DESIGNED TO RESIST BUOYANCY WITH A FLOOD EL. OF 17.46 AND FOS = 2.00.
3. CONTRACTOR TO SUBMIT SHOP DRAWINGS & BUOYANCY CALCULATIONS PREPARED BY A REGISTERED PROFESSIONAL ENGINEER IN THE STATE OF MA TO EOR FOR REVIEW AND APPROVAL PRIOR TO CONSTRUCTION.

2 OUTLET CONTROL STRUCTURE - RECHARGE SYSTEM

NTS

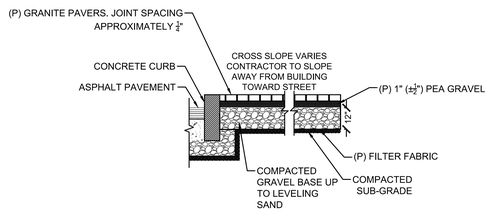

3 PERMEABLE GRANITE PAVERS

NTS

NOTES:

1. EXISTING CONDITIONS INFORMATION IS BASED ON A SURVEY PREPARED BY FELDMAN GEOSPATIAL TITLED "11 SLEEPER STREET, 12 FARNSWORTH STREET", DATED 17 OCTOBER 2021.
2. ALL PROPOSED BWSC UTILITY CONNECTIONS WILL BE PERFORMED IN ACCORDANCE WITH ALL BWSC STANDARDS AND REQUIREMENTS. CONTRACTOR TO SUBMIT SKETCH OF PROPOSED UTILITY TRENCH AND CONNECTION DETAIL TO EOR FOR REVIEW AND APPROVAL PRIOR TO UNDERTAKING ANY AFFECTED WORK.
3. FOUNDATION ELEMENTS ARE BASED ON A DRAWING PROVIDED BY THE BOSTON ARCHIVES TITLED "WAREHOUSE FOR THE WESTINGHOUSE ELECTRIC CO." PREPARED BY H.B. PRESCOTT AND DATED 30 APRIL 1917.
4. EXISTING SLOPE OF THE MAINS IN FARNSWORTH STREET IS BASED ON A RECORD AS-BUILT DRAWING PROVIDED BY BWSC TITLED "INSTALLATION OF SEWER AND DRAIN PIPES IN SOUTH BOSTON, AS-BUILT PLAN Z123-25" DATED 2 FEBRUARY 2010. PROPOSED INVERTS OF THE CONNECTION TO THE MAINS IN FARNSWORTH REQUIRES FIELD VERIFICATION PRIOR TO CONSTRUCTION AND ARE SUBJECT TO CHANGE.
5. CONTRACTOR TO FORMALLY LOCATE ALL EXISTING UTILITY MAINS AND SUBMIT A SKETCH TO EOR OF MATERIAL, SIZE, AND LOCATION PRIOR TO UNDERTAKING AFFECTED WORK. CONTRACTOR TO IDENTIFY POTENTIAL UTILITY CONFLICTS WITH PROPOSED SERVICES BASED ON FIELD VERIFICATION OF EXISTING UTILITIES AND PROVIDE A SKETCH TO THE EOR FOR REVIEW AND APPROVAL PRIOR TO UNDERTAKING AFFECTED WORK.
6. CONTRACTOR TO SUBMIT PRODUCT DATA FOR RECHARGE CHAMBERS TO EOR FOR REVIEW AND APPROVAL PRIOR TO UNDERTAKING AFFECTED WORK.
7. THE RECHARGE AND UTILITY SCOPE DEPICTED HEREIN IS SUBJECT TO CHANGE DURING THE BWSC SITE PLAN REVIEW PROCESS.
8. THE ENTIRE PROJECT SITE IS LOCATED WITHIN FLOOD ZONE AE (100-YEAR FLOODPLAIN) PER FEMA FIRM MAP 25025C0081J DATED 16 MARCH 2016.

0 10 20 30 40

SCALE: 1" = 10'

ISSUED FOR NOTICE OF INTENT - NOT FOR CONSTRUCTION

225 Franklin Street, Suite 1100
Boston, MA 02110
t 617.478.0300
f 617.478.0321
www.perkinswill.com

CONSULTANTS

CIVIL

SGH
SIMPSON GUMPERTZ & HEGER
400 Totten Pond Road
Waltham, MA 02451
781.907.9000
sgh.com

STRUCTURAL

MEPFP

ACOUSTICAL

OWNER

CONTRACTOR

PROJECT

CORE/SHELL RENOVATION

12 FARNSWORTH STREET
BOSTON, MA

PHASE 3

KEYPLAN

TRUE NORTH

11/24/2021

ISSUE CHART

COMMONWEALTH OF MASSACHUSETTS
SEAN P. DONLON, Jr.
CIVIL
No. 49201
REGISTERED PROFESSIONAL ENGINEER

Sean P Donlon

MARK	ISSUE	DATE
2	REVISED NOTICE OF INTENT	02/18/22
1	NOTICE OF INTENT	02/16/22

Job Number

TITLE

GRADING AND UTILITY PLAN

SHEET NUMBER

C300

© 2020 Perkins and Will

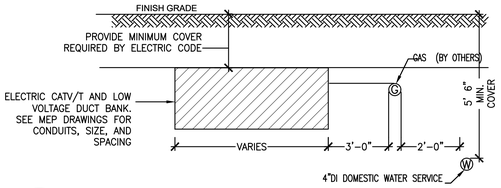

1 TYPICAL MINIMUM REQUIRED UTILITY SEPARATION

NTS

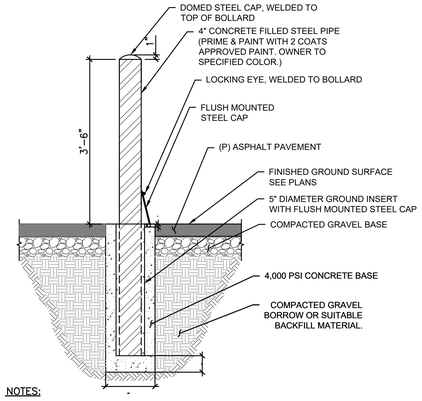

NOTES:

1. ALIGN BOLLARD PIPE AND GROUND INSERT SO THAT EYES ARE LOCATED EITHER AT BACK OR FRONT OF BOLLARD.

2 (P) BOLLARD

NTS

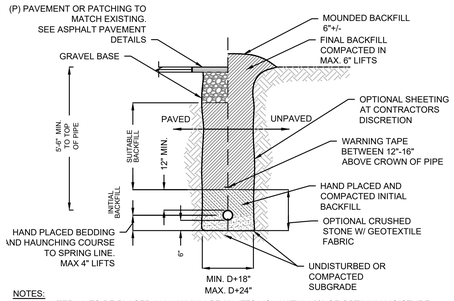

NOTES:

1. ALL MATERIAL TO BE PLACED IN MAXIMUM OF 6" LIFTS UON WITHIN 2% OF OPTIMUM MOISTURE CONTENT AND COMPACTED TO 95% OF STANDARD PROCTOR MAXIMUM DRY DENSITY PER ASTM D 698 BEFORE PLACING NEXT LIFT. ALL FILL PLACED BELOW PIPES AND STRUCTURES SHALL MEET THIS REQUIREMENT.
2. FOR ALL TRENCHES WITH A GRADE GREATER THAN 4% AND/OR WHERE GROUNDWATER IS APPARENT, INSTALL 1' THICK TRENCH DAMS ACROSS THE TRENCH TO 1' BELOW FINISH GRADE OR MIN 1 PER PIPE SEGMENT, MAX 100' O.C.. REFER TO MATERIALS SECTION FOR ADDITIONAL INFORMATION.
3. ALL TRENCHES TO BE CONSTRUCTED IN ACCORDANCE WITH ALL APPLICABLE BWSC STANDARDS AND REQUIREMENTS.

3 TYPICAL TRENCH INSTALLATION (WATER MAIN)

NTS

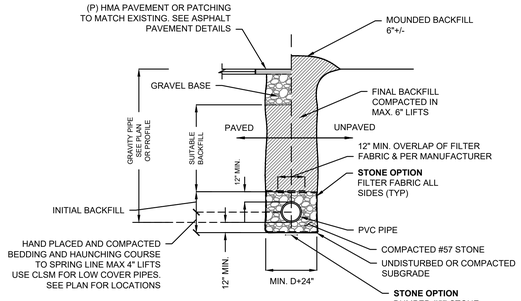

NOTES:

1. ALL BACKFILL MATERIAL TO BE PLACED IN MAXIMUM OF 6" LIFTS UON WITHIN 2% OF OPTIMUM MOISTURE CONTENT AND COMPACTED TO 95% OF STANDARD PROCTOR MAXIMUM DRY DENSITY PER ASTM D 698 BEFORE PLACING NEXT LIFT. ALL FILL PLACED BELOW PIPES AND STRUCTURES SHALL MEET THIS REQUIREMENT.
2. INSTALL TRENCH DAMS AROUND PIPE AT 100' INTERVALS.
3. FOR ALL TRENCHES WITH A GRADE GREATER THAN 4% AND/OR WHERE GROUNDWATER IS APPARENT, INSTALL 1' THICK TRENCH DAMS ACROSS THE TRENCH TO 1' BELOW FINISH GRADE OR MIN 1 PER PIPE SEGMENT, MAX 100' O.C.. REFER TO MATERIALS SECTION FOR ADDITIONAL INFORMATION..
4. ALL TRENCHES TO BE CONSTRUCTED IN ACCORDANCE WITH ALL APPLICABLE BWSC STANDARDS AND REQUIREMENTS.

4 TYPICAL TRENCH INSTALLATION (PVC PIPE)

NTS

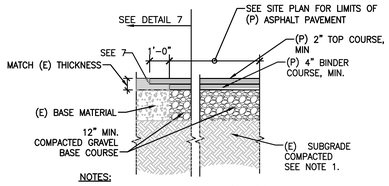

NOTES:

1. CONTRACTOR TO COMPACT TOP 1' OF (E) SUBGRADE TO 95% MAX DENSITY PER ASTM 698. OBTAIN SAMPLES TO PROVIDE LABORATORY COMPACTION CURVE AND STATEMENT OF OPTIMUM MOISTURE CONTENT PER SPECIFICATIONS.
2. ALL (P) PAVEMENT TO MATCH (E) PAVEMENT THICKNESS BUT SHOULD NOT BE LESS THAN MINIMUM THICKNESS SPECIFIED.

6 ASPHALT PAVEMENT

NTS

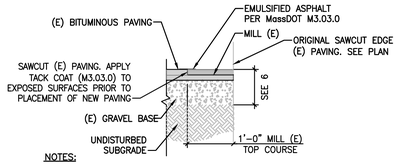

NOTES:

1. EXISTING, ADJOINING PAVEMENT SHALL BE DRY AND FREE OF DEBRIS.

7 ASPHALT TRANSITION

NTS

ISSUED FOR NOTICE OF INTENT - NOT FOR CONSTRUCTION

Perkins&Will

225 Franklin Street, Suite 1100
Boston, MA 02110
t 617.478.0300
f 617.478.0321
www.perkinswill.com

CONSULTANTS

CIVIL

SGH
SIMPSON GUMPERTZ & HEGER
400 Totten Pond Road
Waltham, MA 02451
781.907.9000
sgh.com

STRUCTURAL

MEPFP

ACOUSTICAL

OWNER

CONTRACTOR

PROJECT

CORE/SHELL RENOVATION

12 FARNSWORTH STREET
BOSTON, MA

PHASE3
REAL ESTATE PARTNERS

PHASE 3

KEYPLAN

TRUE NORTH

11/24/2021

ISSUE CHART

Sean P Donlon Jr.

MARK	ISSUE	DATE
2	REVISED NOTICE OF INTENT	02/18/22
1	NOTICE OF INTENT	02/16/22

Job Number

TITLE

CIVIL DETAILS

SHEET NUMBER

C400

© 2020 Perkins and Will